DMG MORI

WTO

Toolholder Program

ALX 1500-2500
NLX/NL 1500-4000
NLX 4000 (High Torque Milling)
NLX 6000
NZX 1500-2000
NZX 2500
NZX 4000
NZX 6000
NTX 1000-3000 2nd Generation
NT 4200-5400

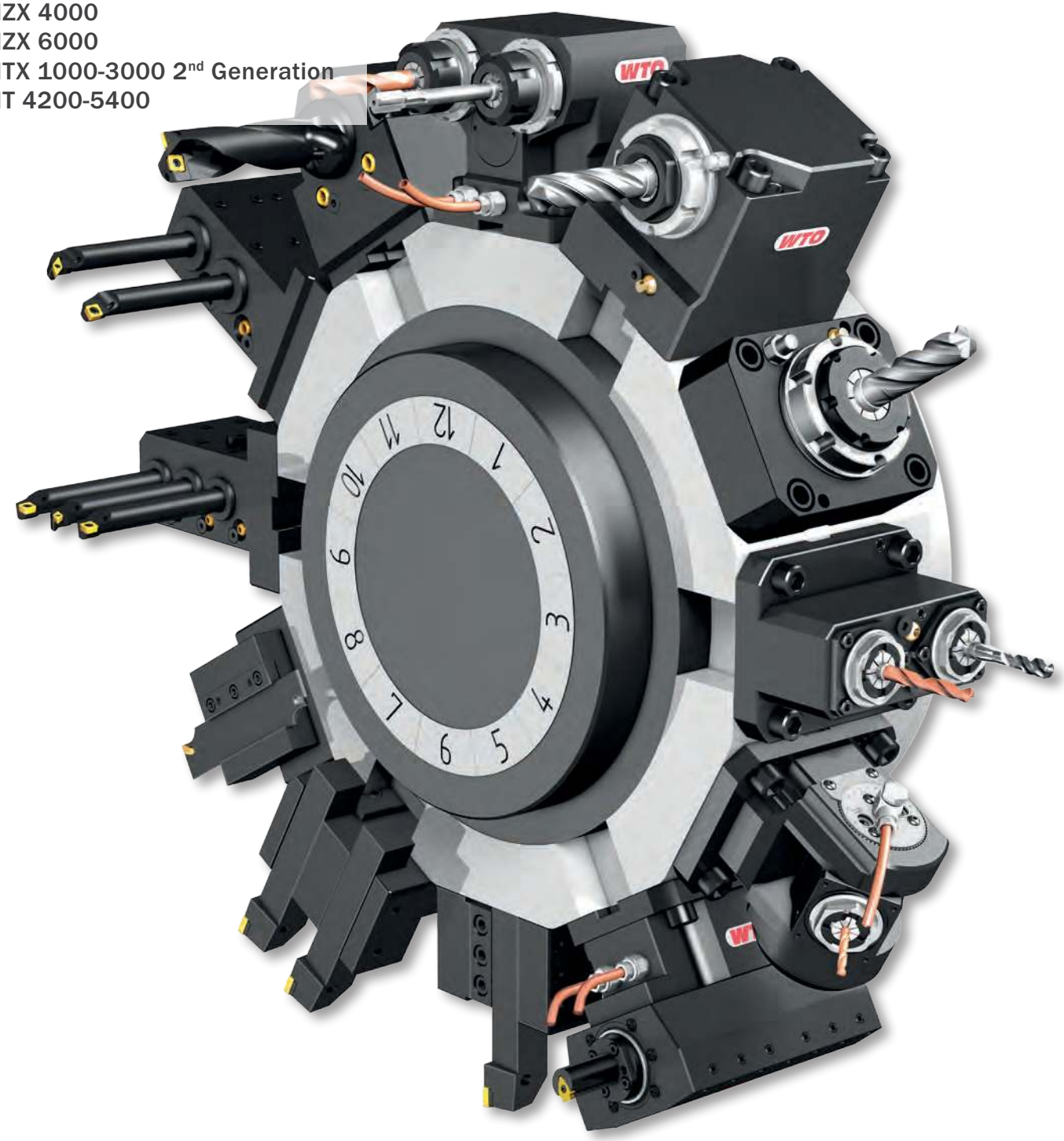

WTO

DMG MORI

QuickFlex®

The new quick change system for
high performance and precision.

Minimal investment, maximal expandability.

Designed for

BMT®
Built-in Motor Turret

ALX 1500-2500 MC/Y/SY	Page	4 - 8
NLX 2500 (static turret only)	Page	9 - 9
NLX/NL 1500-4000 MC/Y/SMC/SY	Page	10 - 16
NLX/NL 1500-2500 (20 ST)	Page	17 - 21
NLX 4000 (High Torque Milling)	Page	22 - 24
NLX 6000, NZX 4000	Page	25 - 26
NZX 1500-2000 (16 ST)	Page	27 - 31
NZX 2500 (BMT60)	Page	32 - 36
NZX 2500 (turret 2 = BMT40)	Page	37 - 40
NZX 6000	Page	41 - 42
NTX 1000-3000 2nd Generation (BMT40)	Page	43 - 47
NTX 2000-3000 2nd Generation (BMT60)	Page	48 - 52
NT 4200-5400	Page	53 - 56
Reduction sleeves	Page	57 - 60
Collets	Page	61 - 63

EC = External coolant supply
HP-IC = High pressure internal coolant supply through cutting tool
IC 80 bar = Internal and external coolant supply
Max. coolant pressure = 80 bar
IC 30 bar = Internal and external coolant supply
Max. coolant pressure = 30 bar
Only use filtered coolant fluid (max. particle size = 50 µm)
Do not run without coolant
Do not use for machining abrasive materials such as cast iron, etc.

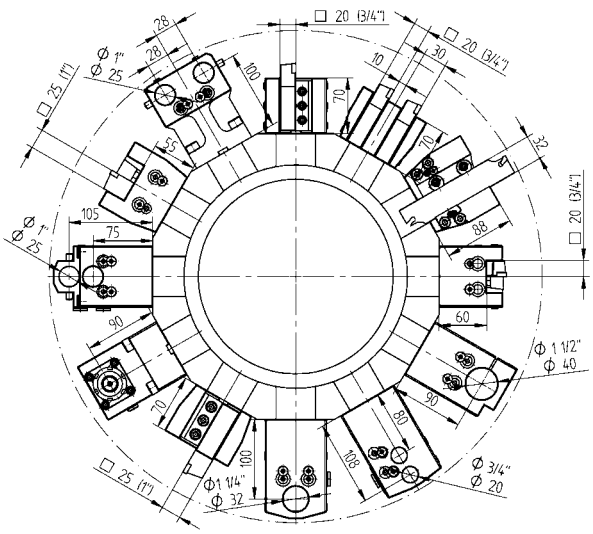

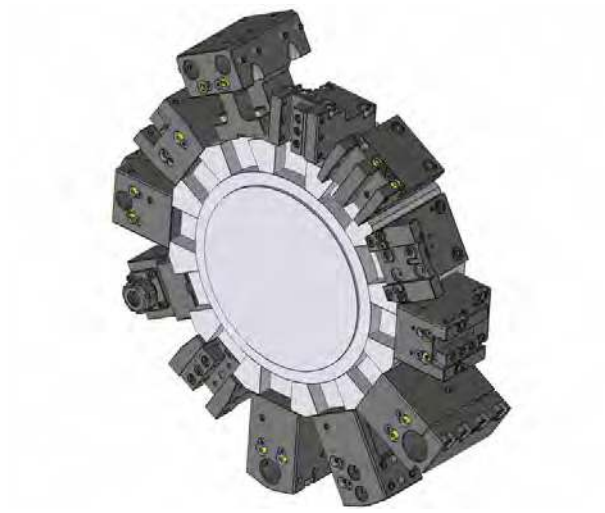

Static Toolholders - Standard Program

OD cutting holder, short

20	48-T00224 T00224	
25	48-T00267 T00267	
3/4"	48-T00234 T00234	
1"	48-T00272 T00272	

OD cutting holder, short, HP-IC

20	48-T00224-HP T00224	IC 80 bar
25	48-T00267-HP T00267	IC 80 bar
3/4"	48-T00234-HP T00234	IC 80 bar
1"	48-T00272-HP T00272	IC 80 bar

OD cutting holder, both sides, short

20	48-T00228 T00228
25	48-86523
3/4"	48-T00250 T00250
1"	48-86524

OD cutting holder, both sides, short, HP-IC

20	48-T00228-HP T00228	IC 80 bar
25	48-86523-HP	IC 80 bar
3/4"	48-T00250-HP T00250	IC 80 bar
1"	48-86524-HP	IC 80 bar

Face cutting holder

20	48-T03017 T03017
25	48-T03024 T03024
3/4"	48-T03018 T03018
1"	48-T03025 T03025

Static Toolholders - Standard Program

Face cutting holder, HP-IC

20	48-T03017-HP T03017	IC 80 bar
3/4"	48-T03018-HP T03018	IC 80 bar

Cut-off holder, right hand

20	48-T00251 T00251
25	48-T00268 T00268, T00356
3/4"	48-T00252 T00252
1"	48-T00359 T00359, T00357

Boring bar holder

Ø 32	48-T10115 T10115
Ø 1 1/4"	48-T10119 T10119

Combination toolholder

Ø 32	48-T13132 T13132	IC 80 bar
Ø 40	48-77999	IC 80 bar
Ø 1 1/4"	48-T13135 T13135	IC 80 bar
Ø 1 1/2"	48-80016	IC 80 bar

Boring bar holder, both sides

Ø 25	48-T10117 T10117
Ø 1"	48-T10139 T10139

© WTO GmbH * Subject to change without notice * www.wto.de

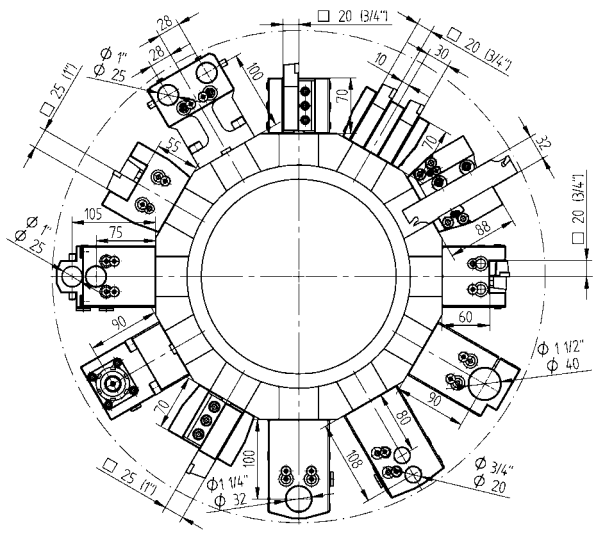

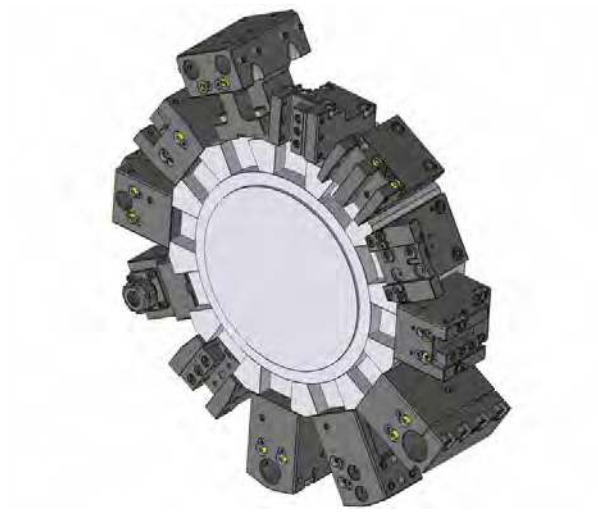

Static Toolholders - Enhanced Program

OD cutting holder, double, Y axis

20 (3/4")	48-77726	

OD cutting holder, both sides, double, Y axis

20 (3/4")	48-77727	

Face cutting holder, both sides

20	48-79608	
3/4"	48-79609	

Cut-off holder, adjustable

SH 32	48-98891	

Cut-off holder, adjustable, HP-IC

SH 32	48-102261R	IC 80 bar
SH 32	48-102261L	IC 80 bar

Boring bar holder, with slot

Ø 32	48-82057
Ø 40	48-82058
Ø 1 1/4"	48-82059
Ø 1 1/2"	48-82060

Boring bar holder, double, universal

Ø 20	48-75406
Ø 3/4"	48-75416

Combination toolholder, both sides, double, Y axis

Ø 25	48-80788	IC 80 bar
Ø 1"	48-81033	IC 80 bar

Static Toolholders - Enhanced Program

Collet face drill holder

ER 25	48-107230	IC 80 bar
	107525000	
ER 32	48-81031	IC 80 bar
	107532000	

VDI adapter, left

VDI 30	48-77732

VDI adapter, right

VDI 30	48-78687

Boring bar holder, blank

48-80506

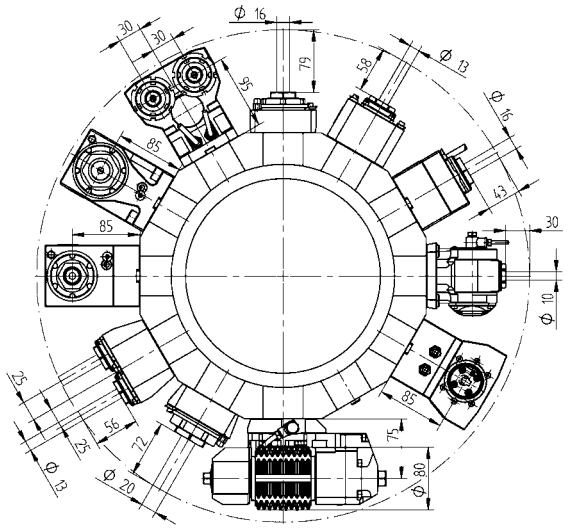

Driven Toolholders - QuickFlex®

OD drill/milling unit (6000 RPM, Heavy Duty)

ER-25 QF	420125010-40 T32274, T32450 0067725000	1:1	EC
ER-25 QF	420125011-40 T32287 0067725000	1:1	IC 80 bar
ER-32 QF	420132010-40 T32475, T32484 0067732000	1:1	EC
ER-32 QF	420132011-40 0067732000	1:1	IC 80 bar

Face drill/milling unit (6000 RPM, Heavy Duty)

ER-25 QF	420525010-40 T32275, T32297 0067725000	1:1	EC
ER-25 QF	420525011-40 T32288, T32435 0067725000	1:1	IC 80 bar
ER-32 QF	420532010-40 T32476, T32485 0067732000	1:1	EC
ER-32 QF	420532011-40 0067732000	1:1	IC 80 bar

Face drill/milling unit, both sides (6000 RPM, Heavy Duty)

ER-25 QF	420525012-40 T32276, T32437 0067725000	1:1	EC
ER-32 QF	420532012-40 0067732000	1:1	EC

Driven Toolholders - Enhanced Program

OD milling unit with combination mill arbor DIN 6358

Ø 16	410216010-40 00675000854	1:1	EC
Ø 22	410222016-40 T32280, T32486 00675000483	1:1	EC
Ø 3/4"	410219003-40 00675000483	1:1	EC

OD drill/milling unit, offset

ER 25	410116050-40 T32279, T32488 00675000932	1:1	EC
ER 25	410116057-40 00675000932	1:1	IC 80 bar
ER 20	410113060-40 00675000939	1:2	EC
ER 20	410113068-40 00675000939	1:2	IC 80 bar
ER 16	410410003-40 00675000937	1:3	EC
ER 16	410410004-40 00675000937	1:3	IC 80 bar
ER 25	410116051-40 00675000932	2:1	EC
ER 25	410116058-40 00675000932	2:1	IC 80 bar

© WTO GmbH * Subject to change without notice * www.wto.de

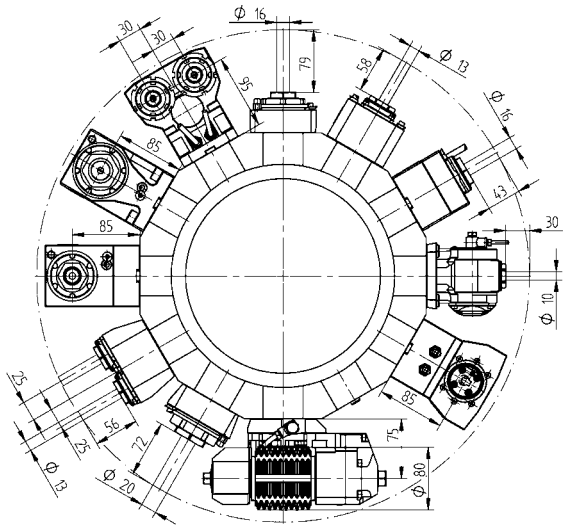

Driven Toolholders - Enhanced Program

Face drill/milling unit

ER-20 QF	420520010-40	1:2	EC
	0067720001		
ER-20 QF	420520011-40	1:2	IC 80 bar
	0067720001		
ER-20 QF	420820010-40	1:3	EC
	0067720001		
ER-20 QF	420820011-40	1:3	IC 80 bar
	0067720001		
ER-32 QF	420532013-40	2:1	EC
	0067732000		
ER-32 QF	420532014-40	2:1	IC 80 bar
	0067732000		

Face milling unit with combination mill arbor DIN 6358

Ø 16	410616013-40	1:1	EC
	00675000854		
Ø 22	410622030-40	1:1	EC
	00675000483		
Ø 22	410622029-40	2:1	EC
	T32292, T32487		
	00675000160		
Ø 3/4"	410619003-40	1:1	EC
	00675000483		
Ø 1"	410625002-40	2:1	EC
	00675000160		

Driven Toolholders - Enhanced Program

Adjustable angle drill/milling unit

ER 16	411010008-40	1:1	EC
	00675000913		
ER 16	411010009-40	1:1	IC 80 bar
	00675000913		
ER 11	411007001-40	1:2	EC
	00675000914		
ER 11	411007002-40	1:2	IC 80 bar
	00675000914		

Gear hobbing unit

Type 16-1	411500017-40	1:1	EC
Type 16-1	411500018-40	2:1	EC
	00675000954		
	160016161 Ø 16		
	160022161 Ø 22		
	160027161 Ø 27		
	160015161 Ø 5/8"		
	160019161 Ø 3/4"		
	160025161 Ø 1"		
	96394		

OD drill/milling unit, both sides

ER 20	413002015-40	1:1	EC
	00675000947		
ER 20	413002018-40	1:1	IC 80 bar
	00675000947		

OD drill/milling unit, double, Y axis

ER 20	413002014-40	1:1	EC
	00675000947		
ER 20	413002017-40	1:1	IC 80 bar
	00675000947		

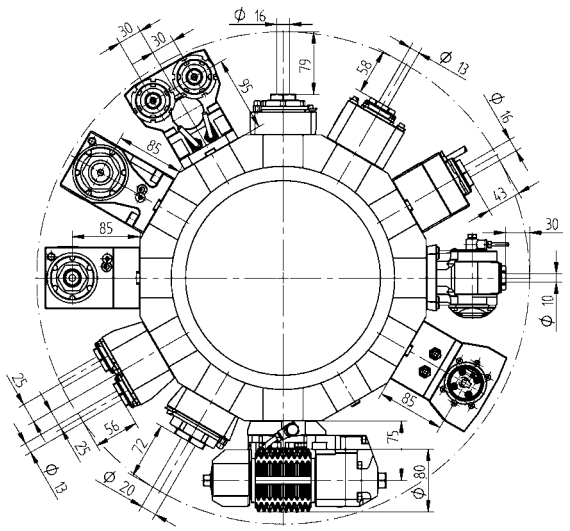

Driven Toolholders - Enhanced Program

2-spindle - Face drill/milling unit, Y axis

ER 25	413502008-40	1:1	EC
	00675000915		
ER 25	413502009-40	1:1	IC 80 bar
	00675000915		

2-spindle - Face drill/milling unit, both sides, Y axis

ER 25	413502007-40	1:1	EC
	00675000915		

Broaching unit for ID and OD

TN765050	414532000-40	1:1	EC

© WTO GmbH * Subject to change without notice * www.wto.de

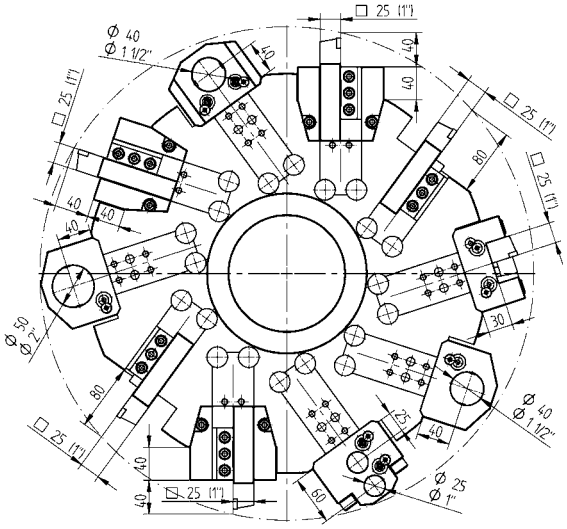

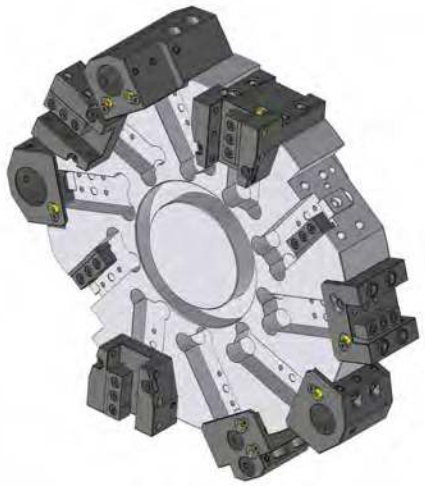

Static Toolholders - Standard Program

Wedge block

25(1")	48-B27036

Wedge shim

25	48-B27037
1"	48-B27038

OD cutting holder

25	48-T00074
1"	48-T00075

Face cutting holder

25	48-T00068
1"	48-T00069

Boring bar holder

Ø 40	48-T10036
Ø 50	48-T10044
Ø 1 1/2"	48-T10037
Ø 2"	48-T10045

Boring bar holder, extended

Ø 1 1/2"	48-T10039

Combination toolholder

Ø 40	48-T13064	IC 80 bar
Ø 50	48-83292	IC 80 bar
Ø 1 1/2"	48-T13065	IC 80 bar
Ø 2"	48-83294	IC 80 bar

Combination toolholder, extended

Ø 40	48-T10038	IC 80 bar

Static Toolholders - Enhanced Program

Work stopper

48-T17002

OD cutting holder, HP-IC

25	48-T00074-HP	IC 80 bar

Face cutting holder, HP-IC

25	48-T00068-HP	IC 80 bar

Boring bar holder, double

Ø 25	48-83452
Ø 1"	48-83592

VDI adapter, left

VDI 30	48-83473

VDI adapter, right

VDI 30	48-49950

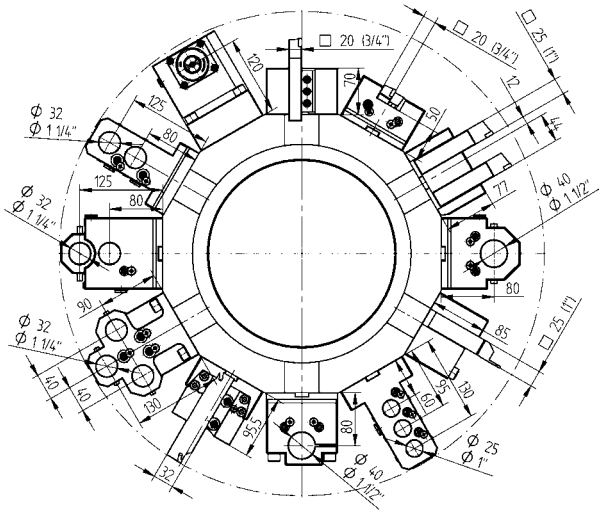

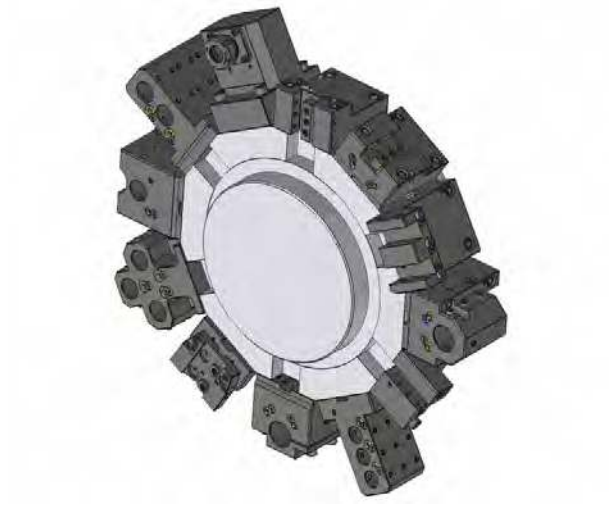

Static Toolholders - Standard Program

OD cutting holder

20	48-T00187 T00187	
25	48-T00186 T00186	
3/4"	48-T00203 T00203	
1"	48-T00202 T00202	

OD cutting holder, HP-IC

25	48-T00186-HP T00186	IC 80 bar
1"	48-T00202-HP T00202	IC 80 bar

OD cutting holder, both sides

20	48-T00185 T00185
25	48-T00184 T00184
3/4"	48-T00201 T00201
1"	48-T00199 T00199

OD cutting holder, both sides, HP-IC

25	48-T00184-HP T00184	IC 80 bar
1"	48-T00199-HP T00199	IC 80 bar

Face cutting holder

20	48-T03006 T03006
25	48-T03005 T03005
3/4"	48-T03014 T03014
1"	48-T03013 T03013

Static Toolholders - Standard Program

Face cutting holder, HP-IC

25	48-T03005-HP T03005	IC 80 bar
1"	48-T03013-HP T03013	IC 80 bar

Cut-off holder, right hand

25	48-T00197 T00197
1"	48-T00198 T00198

Boring bar holder

Ø 40	48-T10097 T10097
Ø 50	48-T10098 T10098
Ø 1 1/2"	48-T10101 T10101
Ø 2"	48-T10102 T10102
Ø 2 1/2"	48-70080

Boring bar holder, long

Ø 40	48-T10113 T10113
Ø 50	48-T10114 T10114
Ø 1 1/2"	48-T10134 T10134
Ø 2"	48-T10135 T10135

Combination toolholder

Ø 40	48-T13128 T13128	IC 80 bar
Ø 50	48-T13139 T13139	IC 80 bar
Ø 1 1/2"	48-T13130 T13130	IC 80 bar
Ø 2"	48-T13140 T13140	IC 80 bar

© WTO GmbH * Subject to change without notice * www.wto.de

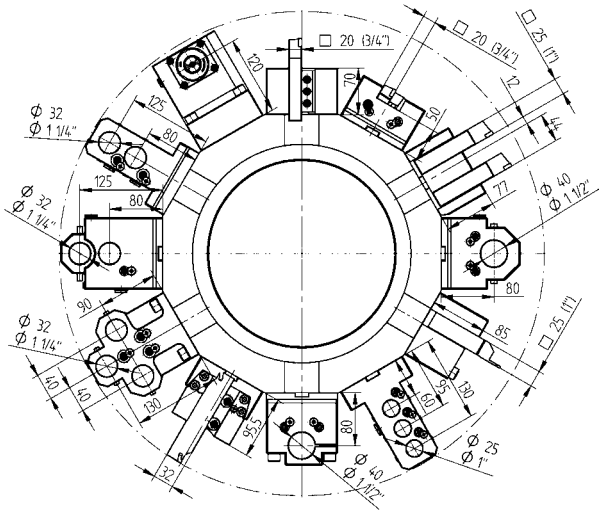

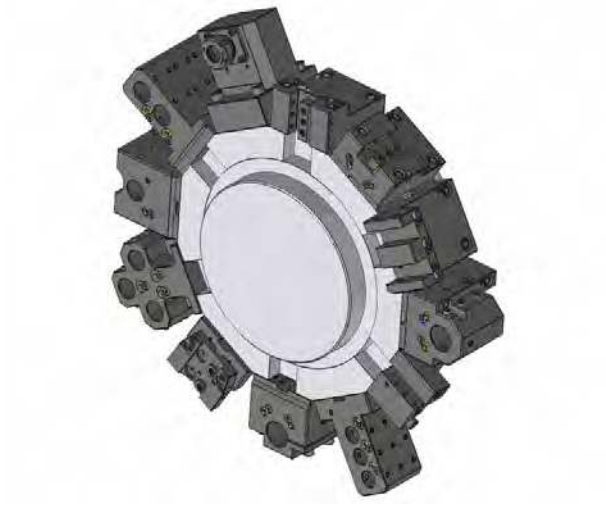

Static Toolholders - Standard Program

Combination toolholder, long

Ø 40	48-T13131 T13131	IC 80 bar
Ø 50	48-77902	IC 80 bar
Ø 1 1/2"	48-T13137 T13137	IC 80 bar
Ø 2"	48-77901	IC 80 bar

Boring bar holder, both sides

Ø 32	48-T10096 T10096
Ø 1 1/4"	48-T10100 T10100
Ø 1 1/2"	48-89192

Combination toolholder, both sides

Ø 40	48-89027	IC 80 bar
Ø 1 1/2"	48-89195	IC 80 bar

Static Toolholders - Enhanced Program

OD cutting holder, right hand, long, HP-IC

25	48-T00385-HP T00385	IC 80 bar
1"	48-T00386-HP T00386	IC 80 bar

OD cutting holder, left hand, long, HP-IC

25	48-T00387-HP T00387	IC 80 bar
1"	48-T00388-HP T00388	IC 80 bar

OD cutting holder, short

25	48-79591
1"	48-79593

OD cutting holder, extended

25	48-T00236 T00236
1"	48-T00245 T00245

OD cutting holder (only for NLX 4000)

32	48-T00450 T00450
1 1/4"	48-T00462 T00462

OD cutting holder, double, Y axis

25(1")	48-71865 T00206, T00210

OD cutting holder, both sides, double, Y axis

25(1")	48-71863 T00253, T00258

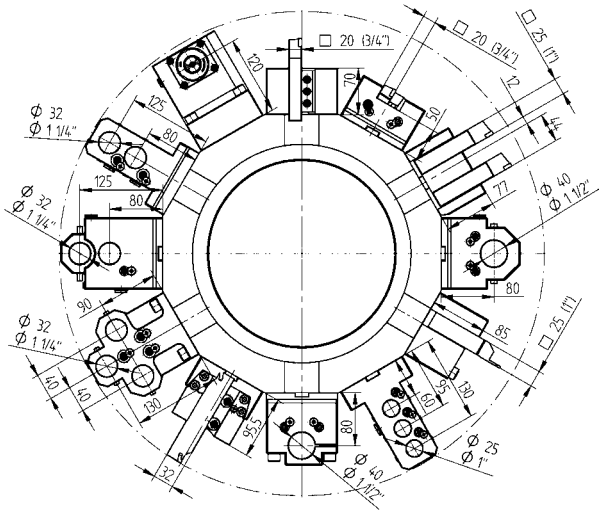

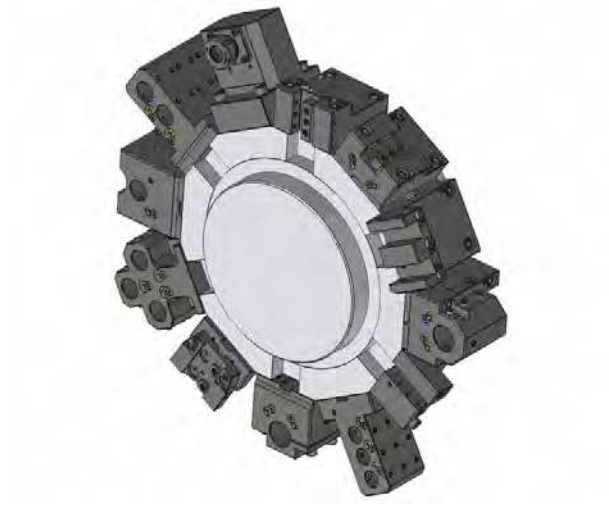

Static Toolholders - Enhanced Program

Face cutting holder, extended

25	48-T03019 T03019
32	48-113046
1"	48-T03020 T03020
1 1/4"	48-112853

Face cutting holder, both sides

25	48-78995
1"	48-78996

Cut-off holder, adjustable

SH 32	48-98901

Cut-off holder, adjustable, HP-IC

SH 32	48-102262R	IC 80 bar
SH 32	48-102262L	IC 80 bar

Cut-off holder, adjustable, extended

SH 32	48-77478

Boring bar holder, extended (only for NLX 4000)

Ø 40	48-T13163 T13163
Ø 50	48-T13161 T13161
Ø 1 1/2"	48-T13164 T13164
Ø 2"	48-T13162 T13162

Static Toolholders - Enhanced Program

Boring bar holder, with slot

Ø 40	48-T10136 T10136
Ø 50	48-T10137 T10137
Ø 60	48-70811
Ø 1 1/2"	48-T10143 T10143
Ø 2"	48-T10142 T10142

Boring bar holder, triple, universal

Ø 25	48-T10104 T10104
Ø 1"	48-T10107 T10107

Boring bar holder, double, both sides

Ø 32	48-71889
Ø 1 1/4"	48-72951

Boring bar holder, triple, both sides

Ø 25	48-71875
Ø 1"	48-72949

Boring bar holder, triple, both sides, Y axis

Ø 32	48-85932
Ø 1 1/4"	48-101078

Collet face drill holder

ER 32	48-94564 107532000	IC 80 bar
ER 40	48-94566 107540000	IC 80 bar

© WTO GmbH * Subject to change without notice * www.wto.de

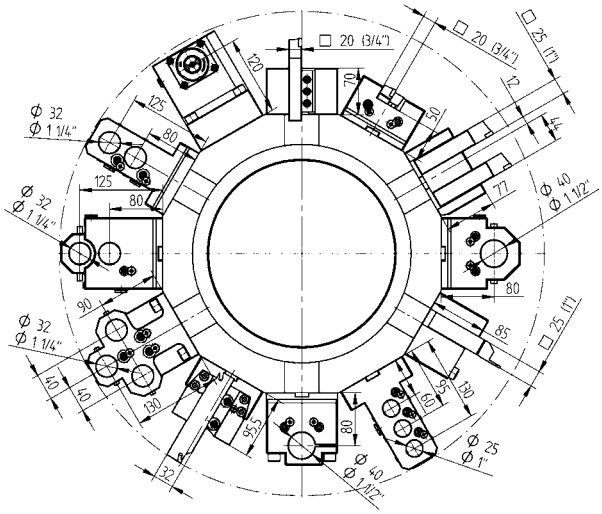

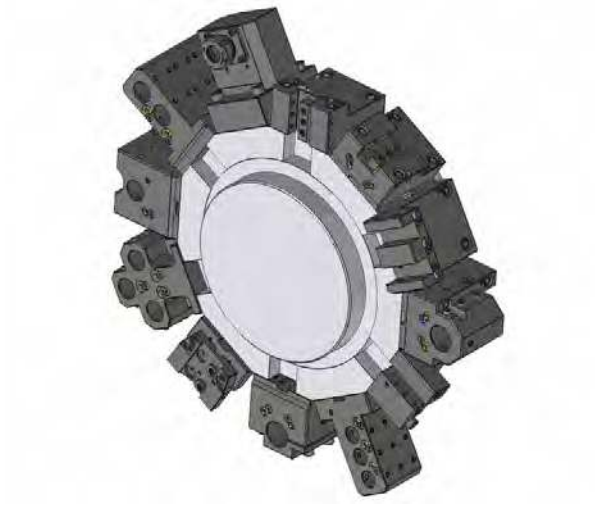

Static Toolholders - Enhanced Program

Collet face drill holder, both sides

ER 32	48-94565	IC 80 bar
	107532000	
ER 40	48-94567	IC 80 bar
	107540000	

VDI adapter, left

VDI 30	48-77127
VDI 40	48-72984

VDI adapter, right

VDI 30	48-74796
VDI 40	48-77955

Boring bar holder, blank

48-81080

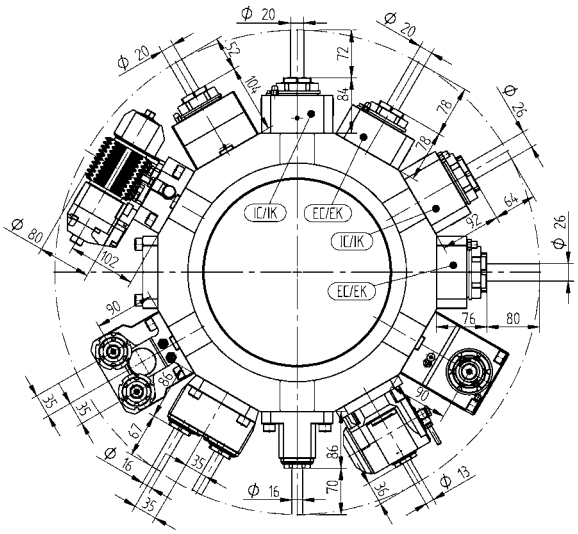

Driven Toolholders - QuickFlex®

OD drill/milling unit (10000 RPM)

ER-32 QF	420132018-60 T32598 0067732000	1:1	EC
ER-32 QF	420132023-60 0067732000	1:1	IC 80 bar

OD drill/milling unit (6000 RPM, Heavy Duty)

ER-32 QF	420132010-60 T32206, T32249 0067732000	1:1	EC
ER-32 QF	420132011-60 T32232, T32478 0067732000	1:1	IC 80 bar
ER-40 QF	420140010-60 T32213 0067740000	1:1	EC
ER-40 QF	420140011-60 T32234 0067740000	1:1	IC 80 bar

Face drill/milling unit (10000 RPM)

ER-32 QF	420532030-60 T32599 0067732000	1:1	EC
ER-32 QF	420532031-60 0067732000	1:1	IC 80 bar

Driven Toolholders - QuickFlex®

Face drill/milling unit (6000 RPM, Heavy Duty)

ER-32 QF	420532010-60 T32207, T32256 0067732000	1:1	EC
ER-32 QF	420532011-60 T32233 0067732000	1:1	IC 80 bar
ER-40 QF	420540012-60 T32214 0067740000	1:1	EC
ER-40 QF	420540013-60 T32235 0067740000	1:1	IC 80 bar

Face drill/milling unit, both sides (10000 RPM)

ER-32 QF	420532041-60 0067732000	1:1	EC

Face drill/milling unit, both sides (6000 RPM, Heavy Duty)

ER-32 QF	420532019-60 T32216 0067732000	1:1	EC
ER-40 QF	420540016-60 T32248 0067740000	1:1	EC

© WTO GmbH * Subject to change without notice * www.wto.de

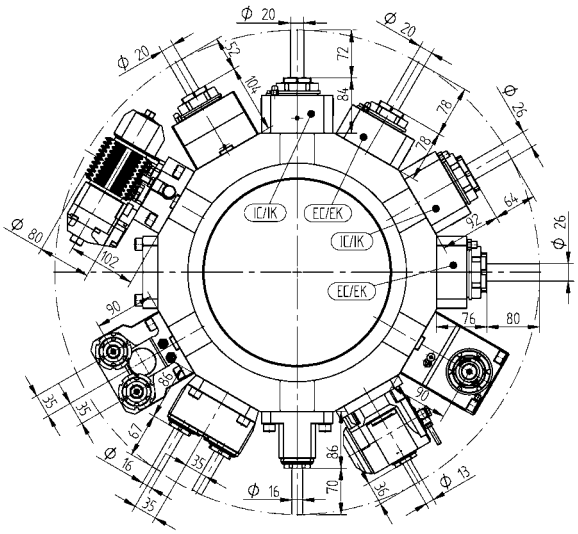

Driven Toolholders - Enhanced Program

OD milling unit with combination mill arbor DIN 6358

Ø 16	410216000-60	1:1	EC
	00675000854		
Ø 22	410222007-60	1:1	EC
	T32268		
	00675000483		
Ø 27	410227008-60	1:1	EC
	00675000245		
Ø 3/4"	410219000-60	1:1	EC
	00675000483		
Ø 1"	410225000-60	1:1	EC
	T32217		
	00675000483		

OD drill/milling unit, offset

ER-32 QF	420132019-60	1:1	EC
	0067732000		
ER-32 QF	420132020-60	1:1	IC 80 bar
	0067732000		
ER-25 QF	420125010-60	1:2	EC
	0067725001		
ER-25 QF	420125011-60	1:2	IC 80 bar
	0067725001		
ER-32 QF	420132021-60	2:1	EC
	0067732000		
ER-32 QF	420132022-60	2:1	IC 80 bar
	0067732000		

Driven Toolholders - Enhanced Program

Face drill/milling unit

ER-25 QF	420525010-60	1:2	EC
	0067725001		
ER-25 QF	420525011-60	1:2	IC 80 bar
	0067725001		
ER-40 QF	420540014-60	2:1	EC
	0067740000		
ER-40 QF	420540015-60	2:1	IC 80 bar
	0067740000		

Face milling unit with combination mill arbor DIN 6358

Ø 22	410622000-60	2:1	EC
	T32269		
	00675000483		
Ø 27	410627000-60	2:1	EC
	00675000245		
Ø 1"	410625000-60	2:1	EC
	T32226		
	00675000483		

Adjustable angle drill/milling unit

ER 20	411013009-60	1:1	EC
	T32474		
	00675000928		
ER 20	411013010-60	1:1	IC 80 bar
	00675000928		
ER 16	411010001-60	1:2	EC
	00675000936		
ER 16	411010002-60	1:2	IC 80 bar
	00675000936		

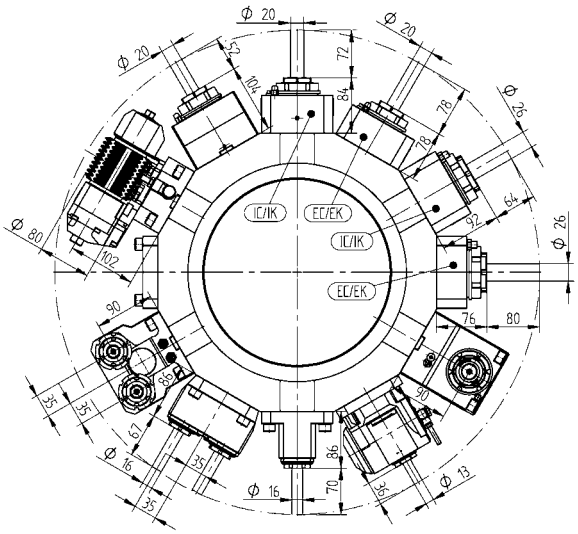

Driven Toolholders - Enhanced Program

Slitting saw unit

Type 19-2	411500006-60	3:1	EC
	00675000855		
	160022192 Ø 22		
	160027192 Ø 27		
	160032192 Ø 32		
	160040192 Ø 40		
	160023192 Ø 7/8"		
	160025192 Ø 1"		
	160031192 Ø 1 1/4"		
	160038192 Ø 1 1/2"		

Gear hobbing unit

Type 16-1	411500007-60	1:1	EC
Type 16-1	411500008-60	2:1	EC
	00675000926		
	160016161 Ø 16		
	160022161 Ø 22		
	160027161 Ø 27		
	160015161 Ø 5/8"		
	160019161 Ø 3/4"		
	160025161 Ø 1"		
	96394		

OD drill/milling unit, both sides

ER 25	413002001-60	1:1	EC
	00675000907		

OD drill/milling unit, double, Y axis

ER 25	413002000-60 T32267	1:1	EC
	00675000907		

Driven Toolholders - Enhanced Program

2-spindle - Face drill/milling unit, Y axis

ER 25	413502000-60 T32264	1:1	EC
	00675000915		
ER 25	413502002-60	1:1	IC 80 bar
	00675000915		

2-spindle - Face drill/milling unit, both sides, Y axis

ER 25	413502001-60	1:1	EC
	00675000915		

4-spindle - Face drill/milling unit, both sides

ER 20	413504000-60	1:1	EC
	00675000974		

Broaching unit for ID and OD

TN765050	414532000-60	1:1	EC

Power Skiving Unit (only for NLX 1500-3000 MC/Y/SMC/SY)

Hydraulic	414920000-60	1:1	EC
	106445		

© WTO GmbH * Subject to change without notice * www.wto.de

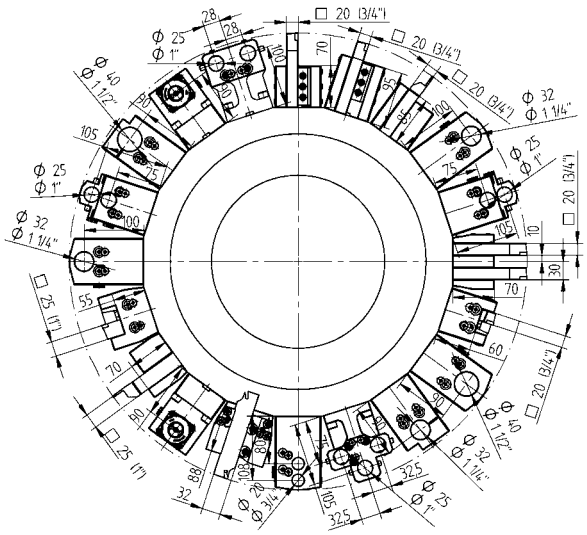

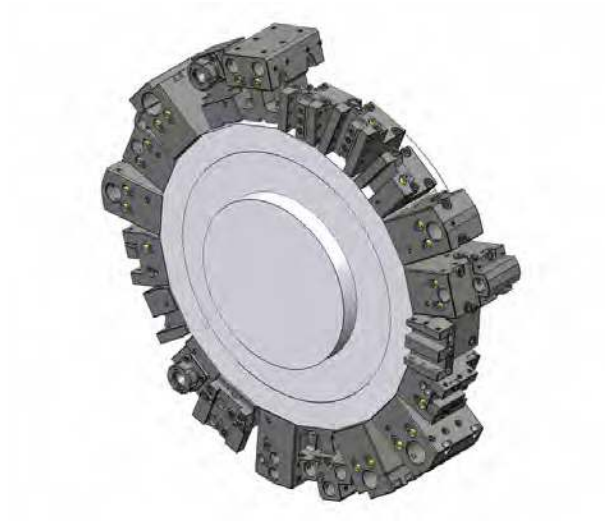

Static Toolholders - Standard Program

OD cutting holder, short

20	48-T00224 T00224	
25	48-T00267 T00267	
3/4"	48-T00234 T00234	
1"	48-T00272 T00272	

OD cutting holder, short, HP-IC

20	48-T00224-HP T00224	IC 80 bar
25	48-T00267-HP T00267	IC 80 bar
3/4"	48-T00234-HP T00234	IC 80 bar
1"	48-T00272-HP T00272	IC 80 bar

OD cutting holder, long

20	48-T00225 T00225
3/4"	48-T00235 T00235

OD cutting holder, both sides, short

20	48-T00228 T00228
25	48-86523
3/4"	48-T00250 T00250
1"	48-86524

OD cutting holder, both sides, short, HP-IC

20	48-T00228-HP T00228	IC 80 bar
25	48-86523-HP	IC 80 bar
3/4"	48-T00250-HP T00250	IC 80 bar
1"	48-86524-HP	IC 80 bar

Static Toolholders - Standard Program

OD cutting holder, both sides, long

20	48-T00226 T00226
3/4"	48-T00249 T00249

Face cutting holder

20	48-T03017 T03017
25	48-T03024 T03024
3/4"	48-T03018 T03018
1"	48-T03025 T03025

Face cutting holder, HP-IC

20	48-T03017-HP T03017	IC 80 bar
3/4"	48-T03018-HP T03018	IC 80 bar

Cut-off holder, right hand

20	48-T00251 T00251
25	48-T00268 T00268, T00356
3/4"	48-T00252 T00252
1"	48-T00359 T00359, T00357

Combination toolholder

Ø 32	48-T13132 T13132	IC 80 bar
Ø 40	48-77999	IC 80 bar
Ø 1 1/4"	48-T13135 T13135	IC 80 bar
Ø 1 1/2"	48-80016	IC 80 bar

Boring bar holder, both sides

Ø 25	48-T10117 T10117
Ø 1"	48-T10139 T10139

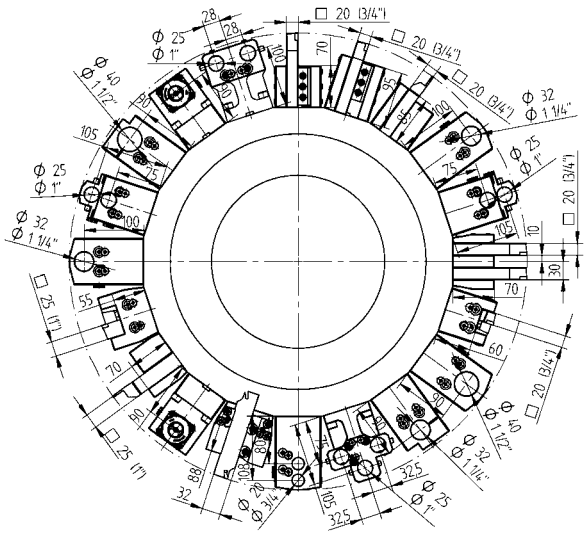

Static Toolholders - Enhanced Program

OD cutting holder, double, Y axis

20 (3/4")	48-77726

OD cutting holder, both sides, double, Y axis

20 (3/4")	48-77727

Face cutting holder, both sides

20	48-79608
3/4"	48-79609

Cut-off holder, adjustable

SH 32	48-98891

Cut-off holder, adjustable, HP-IC

SH 32	48-102261R	IC 80 bar
SH 32	48-102261L	IC 80 bar

Boring bar holder, with slot

Ø 32	48-82057
Ø 40	48-82058
Ø 1 1/4"	48-82059
Ø 1 1/2"	48-82060

Boring bar holder, double, universal

Ø 20	48-75406
Ø 3/4"	48-75416

Boring bar holder, double, both sides

Ø 20	48-75404
Ø 3/4"	48-75417

Static Toolholders - Enhanced Program

Combination toolholder, both sides, double, Y axis

Ø 25	48-80788	IC 80 bar
Ø 1"	48-81033	IC 80 bar

Combination toolholder, both sides, triple, Y axis

Ø 25	48-85908	IC 80 bar
Ø 1"	48-85985	IC 80 bar

Collet face drill holder

ER 25	48-107230	IC 80 bar
	107525000	
ER 32	48-81031	IC 80 bar
	107532000	

Collet face drill holder, both sides

ER 25	48-107227	IC 80 bar
	107525000	
ER 32	48-80509	IC 80 bar
	107532000	

VDI adapter, left

VDI 30	48-77732

VDI adapter, right

VDI 30	48-78687

Boring bar holder, blank

48-80506

© WTO GmbH * Subject to change without notice * www.wto.de

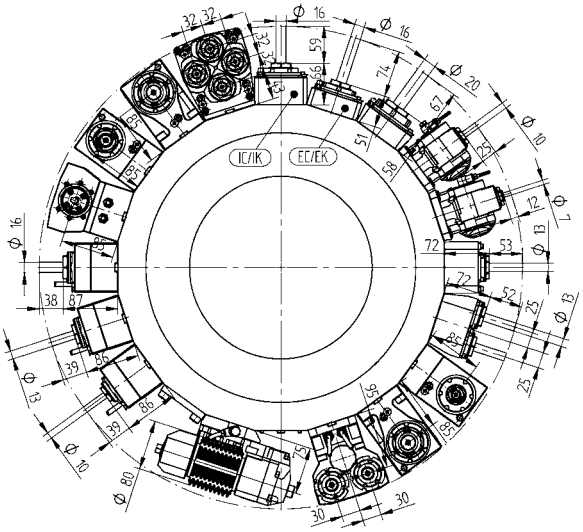

Driven Toolholders - QuickFlex®

OD drill/milling unit (12000 RPM)

ER-25 QF	420125012-40 T32433 0067725000	1:1	EC
ER-25 QF	420125013-40 0067725000	1:1	IC 80 bar

OD drill/milling unit (6000 RPM, Heavy Duty)

ER-25 QF	420125010-40 T32274, T32450 0067725000	1:1	EC
ER-25 QF	420125011-40 T32287 0067725000	1:1	IC 80 bar
ER-32 QF	420132010-40 T32475, T32484 0067732000	1:1	EC
ER-32 QF	420132011-40 0067732000	1:1	IC 80 bar

Face drill/milling unit (12000 RPM)

ER-25 QF	420525013-40 T32434 0067725000	1:1	EC
ER-25 QF	420525014-40 T32436 0067725000	1:1	IC 80 bar

Driven Toolholders - QuickFlex®

Face drill/milling unit (6000 RPM, Heavy Duty)

ER-25 QF	420525010-40 T32275, T32297 0067725000	1:1	EC
ER-25 QF	420525011-40 T32288, T32435 0067725000	1:1	IC 80 bar
ER-32 QF	420532010-40 T32476, T32485 0067732000	1:1	EC
ER-32 QF	420532011-40 0067732000	1:1	IC 80 bar

Face drill/milling unit, both sides (12000 RPM)

ER-25 QF	420525049-40 0067725000	1:1	EC

Face drill/milling unit, both sides (6000 RPM, Heavy Duty)

ER-25 QF	420525012-40 T32276, T32437 0067725000	1:1	EC
ER-32 QF	420532012-40 0067732000	1:1	EC

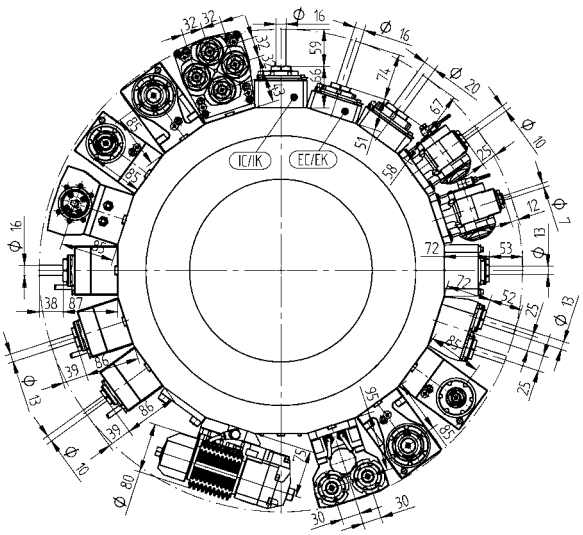

Driven Toolholders - Enhanced Program

OD milling unit with combination mill arbor DIN 6358

Ø 16	410216010-40 00675000854	1:1	EC
Ø 22	410222016-40 T32280, T32486 00675000483	1:1	EC
Ø 3/4"	410219003-40 00675000483	1:1	EC

OD drill/milling unit, offset

ER 25	410116050-40 T32279, T32488 00675000932	1:1	EC
ER 25	410116057-40 00675000932	1:1	IC 80 bar
ER 20	410113060-40 00675000939	1:2	EC
ER 20	410113068-40 00675000939	1:2	IC 80 bar
ER 16	410410003-40 00675000937	1:3	EC
ER 16	410410004-40 00675000937	1:3	IC 80 bar
ER 25	410116051-40 00675000932	2:1	EC
ER 25	410116058-40 00675000932	2:1	IC 80 bar

OD drill/milling unit, offset (12000 RPM)

ER 25	410116060-40 00675000932	1:1	EC
ER 25	410116059-40 00675000932	1:1	IC 80 bar

Driven Toolholders - Enhanced Program

Face drill/milling unit

ER-20 QF	420520010-40 0067720001	1:2	EC
ER-20 QF	420520011-40 0067720001	1:2	IC 80 bar
ER-20 QF	420820010-40 0067720001	1:3	EC
ER-20 QF	420820011-40 0067720001	1:3	IC 80 bar
ER-32 QF	420532013-40 0067732000	2:1	EC
ER-32 QF	420532014-40 0067732000	2:1	IC 80 bar

Face milling unit with combination mill arbor DIN 6358

Ø 16	410616013-40 00675000854	1:1	EC
Ø 22	410622030-40 00675000483	1:1	EC
Ø 22	410622029-40 T32292, T32487 00675000160	2:1	EC
Ø 3/4"	410619003-40 00675000483	1:1	EC
Ø 1"	410625002-40 00675000160	2:1	EC

Face back set drill/milling unit

ER 25	410516153-40 00675000801	1:1	EC
ER 25	410516154-40 00675000801	1:1	IC 80 bar

© WTO GmbH * Subject to change without notice * www.wto.de

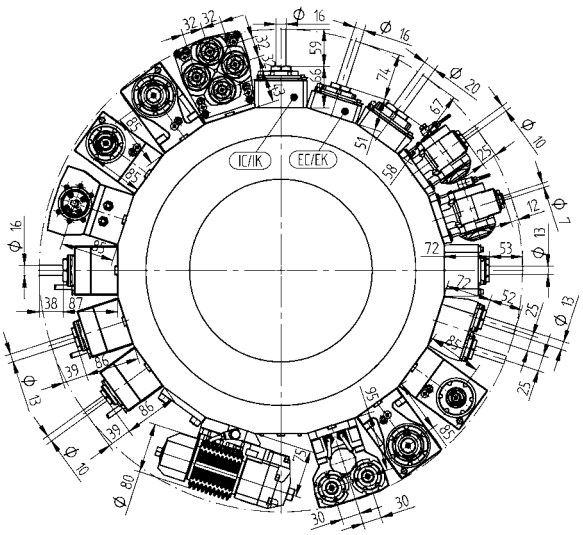

Driven Toolholders - Enhanced Program

Adjustable angle drill/milling unit

ER 16	411010008-40	1:1	EC
	00675000913		
ER 16	411010009-40	1:1	IC 80 bar
	00675000913		
ER 11	411007001-40	1:2	EC
	00675000914		
ER 11	411007002-40	1:2	IC 80 bar
	00675000914		

Gear hobbing unit

Type 16-1	411500017-40	1:1	EC
Type 16-1	411500018-40	2:1	EC
	00675000954		
	160016161 Ø 16		
	160022161 Ø 22		
	160027161 Ø 27		
	160015161 Ø 5/8"		
	160019161 Ø 3/4"		
	160025161 Ø 1"		
	96394		

OD drill/milling unit, both sides

ER 20	413002015-40	1:1	EC
	00675000947		
ER 20	413002018-40	1:1	IC 80 bar
	00675000947		

OD drill/milling unit, double, Y axis

ER 20	413002014-40	1:1	EC
	00675000947		
ER 20	413002017-40	1:1	IC 80 bar
	00675000947		

Driven Toolholders - Enhanced Program

2-spindle - Face drill/milling unit, Y axis

ER 25	413502008-40	1:1	EC
	00675000915		
ER 25	413502009-40	1:1	IC 80 bar
	00675000915		

2-spindle - Face drill/milling unit, both sides, Y axis

ER 25	413502007-40	1:1	EC
	00675000915		

4-spindle - Face drill/milling unit

ER 20	413504001-40	1:1	EC
	00675000947		

4-spindle - Face drill/milling unit, both sides

ER 20	413504000-40	1:1	EC
	00675000947		

Broaching unit for ID and OD

TN765050	414532000-40	1:1	EC

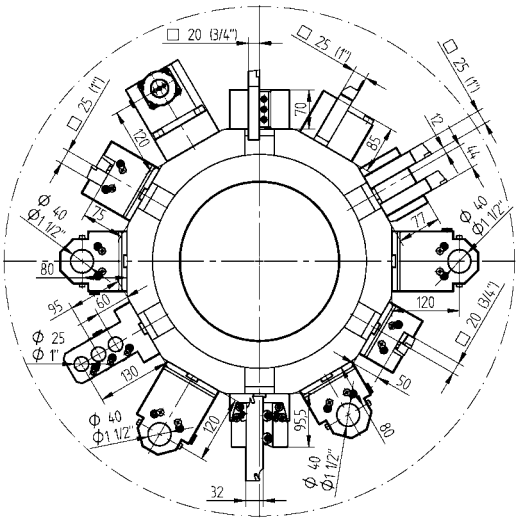

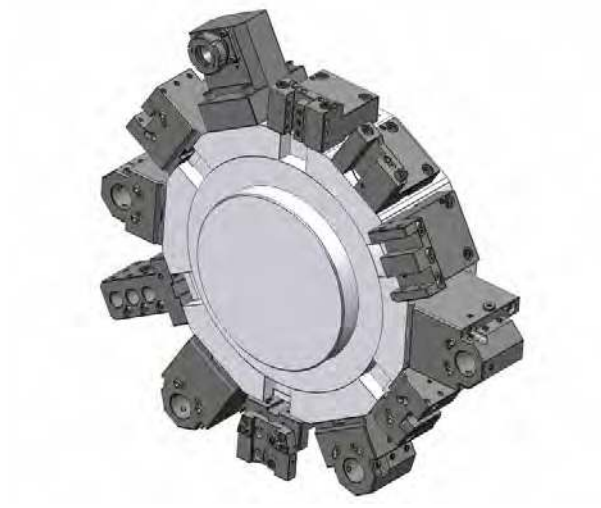

Static Toolholders - Standard Program

OD cutting holder

20	48-T00187 T00187	
25	48-T00186 T00186	
3/4"	48-T00203 T00203	
1"	48-T00202 T00202	

OD cutting holder, HP-IC

25	48-T00186-HP T00186	IC 80 bar
1"	48-T00202-HP T00202	IC 80 bar

Face cutting holder

20	48-T03006 T03006
25	48-T03005 T03005
3/4"	48-T03014 T03014
1"	48-T03013 T03013

Face cutting holder, HP-IC

25	48-T03005-HP T03005	IC 80 bar
1"	48-T03013-HP T03013	IC 80 bar

Cut-off holder, right hand

25	48-T00197 T00197
1"	48-T00198 T00198

Static Toolholders - Standard Program

Combination toolholder

Ø 40	48-T13128 T13128	IC 80 bar
Ø 50	48-T13139 T13139	IC 80 bar
Ø 1 1/2"	48-T13130 T13130	IC 80 bar
Ø 2"	48-T13140 T13140	IC 80 bar

Combination toolholder, long

Ø 40	48-T13131 T13131	IC 80 bar
Ø 50	48-77902	IC 80 bar
Ø 1 1/2"	48-T13137 T13137	IC 80 bar
Ø 2"	48-77901	IC 80 bar

© WTO GmbH * Subject to change without notice * www.wto.de

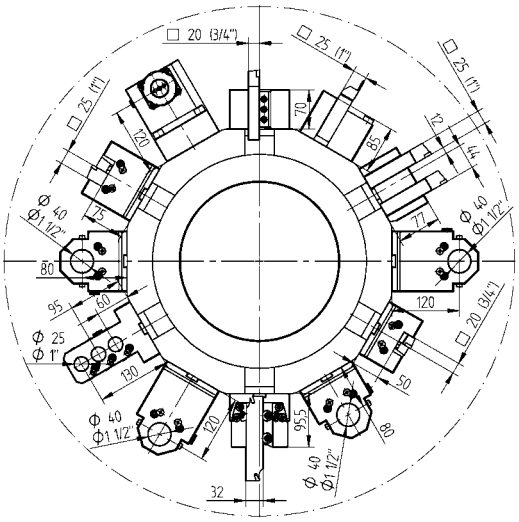

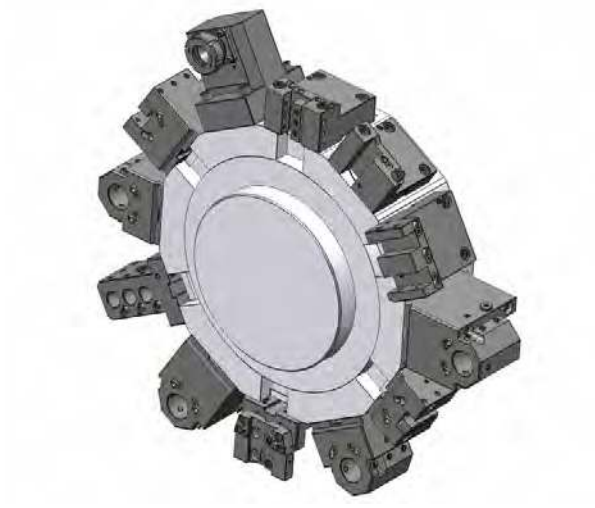

Static Toolholders - Enhanced Program

OD cutting holder, right hand, long, HP-IC

25	48-T00385-HP T00385	IC 80 bar
1"	48-T00386-HP T00386	IC 80 bar

OD cutting holder, left hand, long, HP-IC

25	48-T00387-HP T00387	IC 80 bar
1"	48-T00388-HP T00388	IC 80 bar

OD cutting holder, extended

25	48-T00236 T00236
1"	48-T00245 T00245

OD cutting holder (only for NLX 4000)

32	48-T00450 T00450
1 1/4"	48-T00462 T00462

OD cutting holder, double, Y axis

25(1")	48-71865 T00206, T00210

Face cutting holder, extended

25	48-T03019 T03019
32	48-113046
1"	48-T03020 T03020
1 1/4"	48-112853

Cut-off holder, adjustable

SH 32	48-98901

Static Toolholders - Enhanced Program

Cut-off holder, adjustable, HP-IC

SH 32	48-102262R	IC 80 bar
SH 32	48-102262L	IC 80 bar

Cut-off holder, adjustable, extended

SH 32	48-77478

Boring bar holder, extended (only for NLX 4000)

Ø 40	48-T13163 T13163
Ø 50	48-T13161 T13161
Ø 1 1/2"	48-T13164 T13164
Ø 2"	48-T13162 T13162

Boring bar holder, with slot

Ø 40	48-T10136 T10136
Ø 50	48-T10137 T10137
Ø 60	48-70811
Ø 1 1/2"	48-T10143 T10143
Ø 2"	48-T10142 T10142

Boring bar holder, triple, universal

Ø 25	48-T10104 T10104
Ø 1"	48-T10107 T10107

Collet face drill holder

ER 32	48-94564 107532000	IC 80 bar
ER 40	48-94566 107540000	IC 80 bar

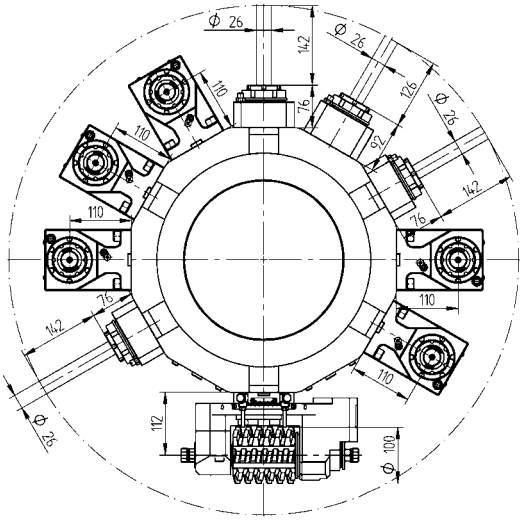

Driven Toolholders - QuickFlex®

OD drill/milling unit (High Torque)

ER-40 QF	420140014-60 T32544	1:1	EC
	0067740000		
ER-40 QF	420140015-60	1:1	IC 80 bar
	0067740000		

Face drill/milling unit (High Torque)

ER-40 QF	420540017-60 T32546	1:1	EC
	0067740000		
ER-40 QF	420540018-60	1:1	IC 80 bar
	0067740000		

Driven Toolholders - Enhanced Program

Gear hobbing unit

Type C5-1	410900003-60	2:1	EC
	00675001008		
	160022C51 Ø 22		
	160027C51 Ø 27		
	160032C51 Ø 32		
	160019C51 Ø 3/4"		
	160025C51 Ø 1"		
	160031C51 Ø 1 1/4"		

© WTO GmbH * Subject to change without notice * www.wto.de

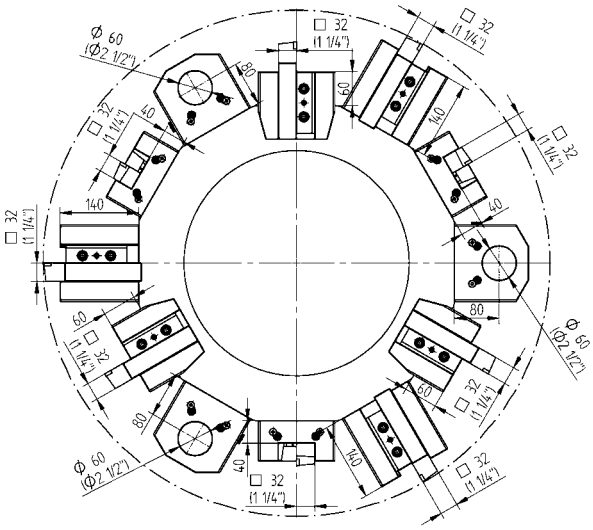

Static Toolholders - Standard Program

OD cutting holder

32	48-T00432 T00432
1 1/4"	48-T00433 T00433

OD cutting holder, long (only for turret 1)

32	48-T00434 T00434
1 1/4"	48-T00435 T00435

Face cutting holder

32	48-T03042 T03042
1 1/4"	48-T03043 T03043

Combination toolholder

Ø 60	48-T10203 T10203	IC 80 bar
Ø 2 1/2"	48-T10204 T10204	IC 80 bar

Static Toolholders - Enhanced Program

Boring bar holder, with slot

Ø 60	48-108639

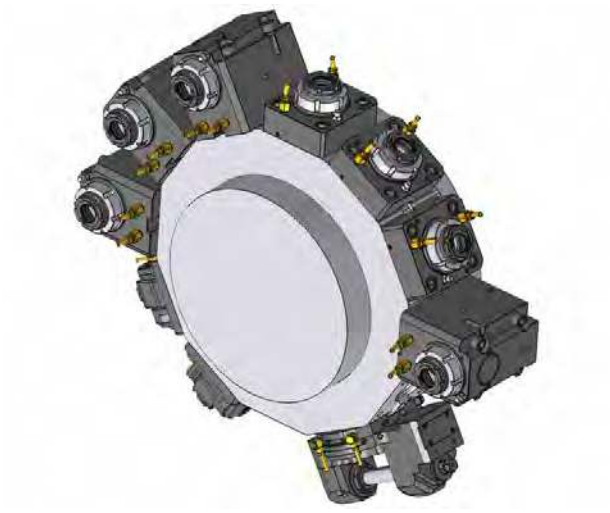

Driven Toolholders - QuickFlex®

OD drill/milling unit

ER-50 QF	420150010-75 T32526 0067750000	1:1	EC
ER-50 QF	420150011-75 T32547 0067750000	1:1	IC 80 bar

OD drill/milling unit (8000 RPM)

ER-50 QF	420150012-75 0067750000	1:1	EC
ER-50 QF	420150013-75 0067750000	1:1	IC 80 bar

Face drill/milling unit

ER-50 QF	420550010-75 T32527 0067750000	1:1	EC
ER-50 QF	420550011-75 T32535 0067750000	1:1	IC 80 bar

Face drill/milling unit (8000 RPM)

ER-50 QF	420550012-75 0067750000	1:1	EC
ER-50 QF	420550013-75 0067750000	1:1	IC 80 bar

Driven Toolholders - Enhanced Program

Adjustable angle drill/milling unit

ER 25	411016002-75 00675000934	1:1	EC
ER 25	411016003-75 00675000934	1:1	IC 80 bar
ER 16	411010004-75 00675000936	1:2	EC
ER 16	411010005-75 00675000936	1:2	IC 80 bar

Gear hobbing unit

Type C5-1	410900000-75 00675001008	2:1	EC

160022C51 Ø 22
160027C51 Ø 27
160032C51 Ø 32
160019C51 Ø 3/4"
160025C51 Ø 1"
160031C51 Ø 1 1/4"

© WTO GmbH * Subject to change without notice * www.wto.de

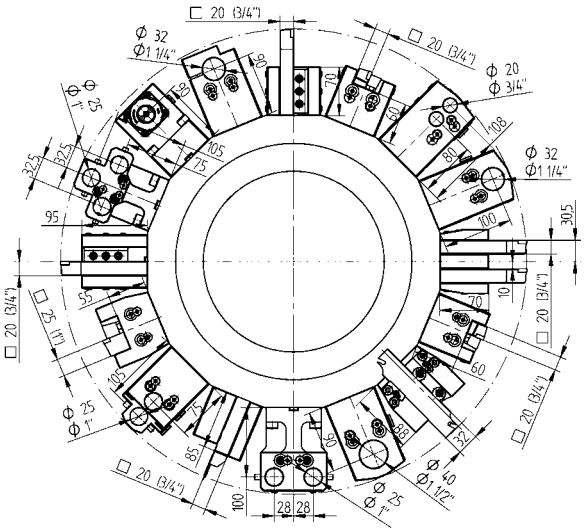

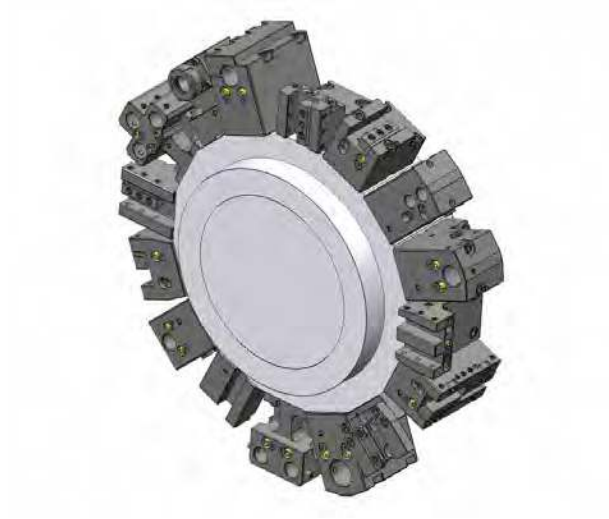

Static Toolholders - Standard Program

OD cutting holder, short

20	48-T00224 T00224	
25	48-T00267 T00267	
3/4"	48-T00234 T00234	
1"	48-T00272 T00272	

OD cutting holder, short, HP-IC

20	48-T00224-HP T00224	IC 80 bar
25	48-T00267-HP T00267	IC 80 bar
3/4"	48-T00234-HP T00234	IC 80 bar
1"	48-T00272-HP T00272	IC 80 bar

OD cutting holder, long

20	48-T00225 T00225
3/4"	48-T00235 T00235

OD cutting holder, both sides, short

20	48-T00228 T00228
25	48-86523
3/4"	48-T00250 T00250
1"	48-86524

OD cutting holder, both sides, short, HP-IC

20	48-T00228-HP T00228	IC 80 bar
25	48-86523-HP	IC 80 bar
3/4"	48-T00250-HP T00250	IC 80 bar
1"	48-86524-HP	IC 80 bar

Static Toolholders - Standard Program

OD cutting holder, both sides, long

20	48-T00226 T00226
3/4"	48-T00249 T00249

Face cutting holder

20	48-T03017 T03017
25	48-T03024 T03024
3/4"	48-T03018 T03018
1"	48-T03025 T03025

Face cutting holder, HP-IC

20	48-T03017-HP T03017	IC 80 bar
3/4"	48-T03018-HP T03018	IC 80 bar

Cut-off holder, right hand

20	48-T00251 T00251
25	48-T00268 T00268, T00356
3/4"	48-T00252 T00252
1"	48-T00359 T00359, T00357

Combination toolholder

Ø 32	48-T13132 T13132	IC 80 bar
Ø 40	48-77999	IC 80 bar
Ø 1 1/4"	48-T13135 T13135	IC 80 bar
Ø 1 1/2"	48-80016	IC 80 bar

Boring bar holder, both sides

Ø 25	48-T10117 T10117
Ø 1"	48-T10139 T10139

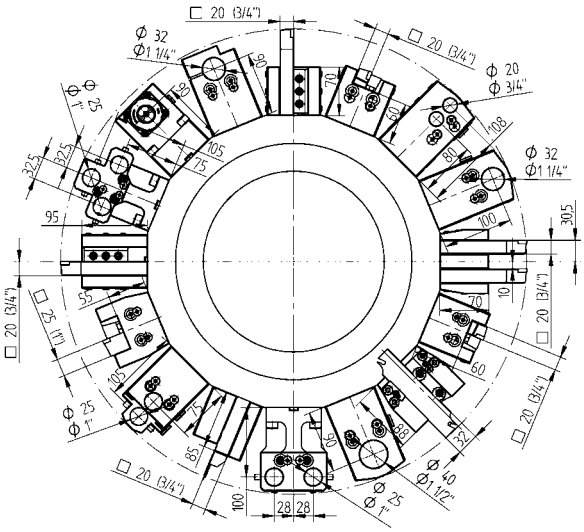

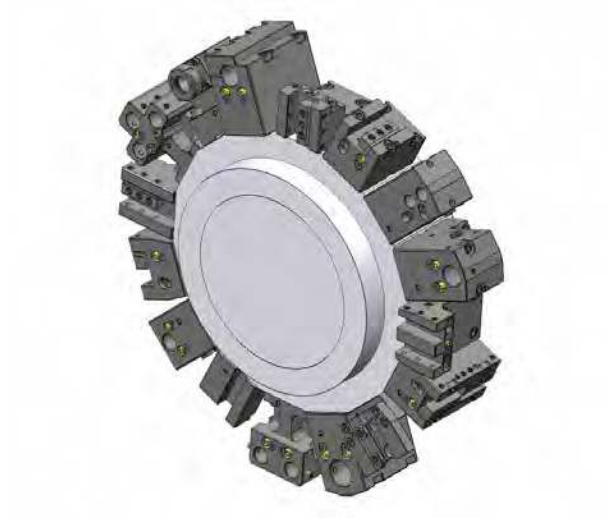

Static Toolholders - Enhanced Program

OD cutting holder, double, Y axis

20 (3/4")	48-77726

OD cutting holder, both sides, double, Y axis

20 (3/4")	48-77727

Face cutting holder, both sides

20	48-79608
3/4"	48-79609

Cut-off holder, adjustable

SH 32	48-98891

Cut-off holder, adjustable, HP-IC

SH 32	48-102261R	IC 80 bar
SH 32	48-102261L	IC 80 bar

Boring bar holder, with slot

Ø 32	48-82057
Ø 40	48-82058
Ø 1 1/4"	48-82059
Ø 1 1/2"	48-82060

Boring bar holder, double, universal

Ø 20	48-75406
Ø 3/4"	48-75416

Boring bar holder, double, both sides

Ø 20	48-75404
Ø 3/4"	48-75417

Static Toolholders - Enhanced Program

Combination toolholder, both sides, double, Y axis

Ø 25	48-80788	IC 80 bar
Ø 1"	48-81033	IC 80 bar

Combination toolholder, both sides, triple, Y axis

Ø 25	48-85908	IC 80 bar
Ø 1"	48-85985	IC 80 bar

Collet face drill holder

ER 25	48-107230	IC 80 bar
	107525000	
ER 32	48-81031	IC 80 bar
	107532000	

Collet face drill holder, both sides

ER 25	48-107227	IC 80 bar
	107525000	
ER 32	48-80509	IC 80 bar
	107532000	

VDI adapter, left

VDI 30	48-77732

VDI adapter, right

VDI 30	48-78687

Boring bar holder, blank

48-80506

© WTO GmbH * Subject to change without notice * www.wto.de

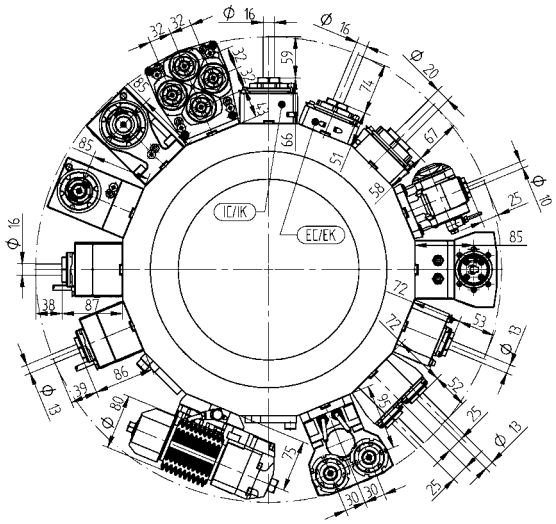

Driven Toolholders - QuickFlex®

OD drill/milling unit (12000 RPM)

ER-25 QF	420125012-40 T32433 0067725000	1:1	EC
ER-25 QF	420125013-40 0067725000	1:1	IC 80 bar

OD drill/milling unit (6000 RPM, Heavy Duty)

ER-25 QF	420125010-40 T32274, T32450 0067725000	1:1	EC
ER-25 QF	420125011-40 T32287 0067725000	1:1	IC 80 bar
ER-32 QF	420132010-40 T32475, T32484 0067732000	1:1	EC
ER-32 QF	420132011-40 0067732000	1:1	IC 80 bar

Face drill/milling unit (12000 RPM)

ER-25 QF	420525013-40 T32434 0067725000	1:1	EC
ER-25 QF	420525014-40 T32436 0067725000	1:1	IC 80 bar

Driven Toolholders - QuickFlex®

Face drill/milling unit (6000 RPM, Heavy Duty)

ER-25 QF	420525010-40 T32275, T32297 0067725000	1:1	EC
ER-25 QF	420525011-40 T32288, T32435 0067725000	1:1	IC 80 bar
ER-32 QF	420532010-40 T32476, T32485 0067732000	1:1	EC
ER-32 QF	420532011-40 0067732000	1:1	IC 80 bar

Face drill/milling unit, both sides (12000 RPM)

ER-25 QF	420525049-40 0067725000	1:1	EC

Face drill/milling unit, both sides (6000 RPM, Heavy Duty)

ER-25 QF	420525012-40 T32276, T32437 0067725000	1:1	EC
ER-32 QF	420532012-40 0067732000	1:1	EC

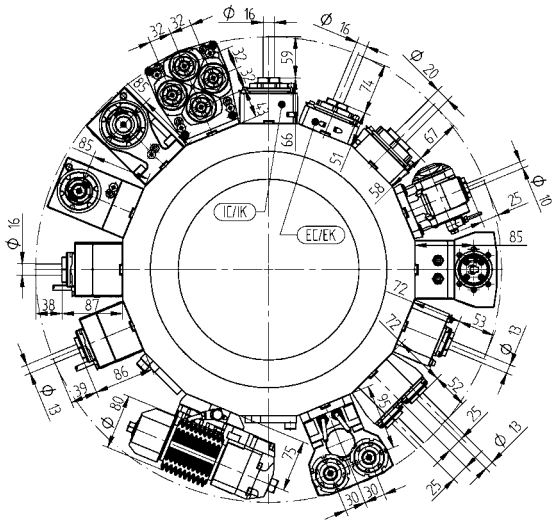

Driven Toolholders - Enhanced Program

OD milling unit with combination mill arbor DIN 6358

Ø 16	410216010-40	1:1	EC
	00675000854		
Ø 22	410222016-40	1:1	EC
	T32280, T32486		
	00675000483		
Ø 3/4"	410219003-40	1:1	EC
	00675000483		

OD drill/milling unit, offset

ER 25	410116050-40	1:1	EC
	T32279, T32488		
	00675000932		
ER 25	410116057-40	1:1	IC 80 bar
	00675000932		
ER 20	410113060-40	1:2	EC
	00675000939		
ER 20	410113068-40	1:2	IC 80 bar
	00675000939		
ER 16	410410003-40	1:3	EC
	00675000937		
ER 16	410410004-40	1:3	IC 80 bar
	00675000937		
ER 25	410116051-40	2:1	EC
	00675000932		
ER 25	410116058-40	2:1	IC 80 bar
	00675000932		

OD drill/milling unit, offset (12000 RPM)

ER 25	410116060-40	1:1	EC
	00675000932		
ER 25	410116059-40	1:1	IC 80 bar
	00675000932		

Driven Toolholders - Enhanced Program

Face drill/milling unit

ER-20 QF	420520010-40	1:2	EC
	0067720001		
ER-20 QF	420520011-40	1:2	IC 80 bar
	0067720001		
ER-20 QF	420820010-40	1:3	EC
	0067720001		
ER-20 QF	420820011-40	1:3	IC 80 bar
	0067720001		
ER-32 QF	420532013-40	2:1	EC
	0067732000		
ER-32 QF	420532014-40	2:1	IC 80 bar
	0067732000		

Face milling unit with combination mill arbor DIN 6358

Ø 16	410616013-40	1:1	EC
	00675000854		
Ø 22	410622030-40	1:1	EC
	00675000483		
Ø 22	410622029-40	2:1	EC
	T32292, T32487		
	00675000160		
Ø 3/4"	410619003-40	1:1	EC
	00675000483		
Ø 1"	410625002-40	2:1	EC
	00675000160		

Face back set drill/milling unit

ER 25	410516153-40	1:1	EC
	00675000801		
ER 25	410516154-40	1:1	IC 80 bar
	00675000801		

© WTO GmbH * Subject to change without notice * www.wto.de

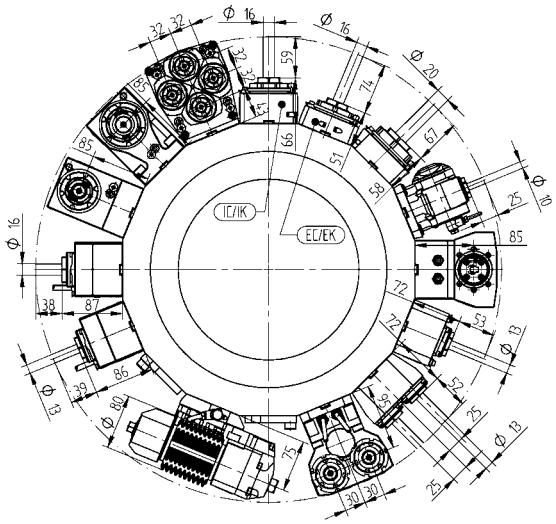

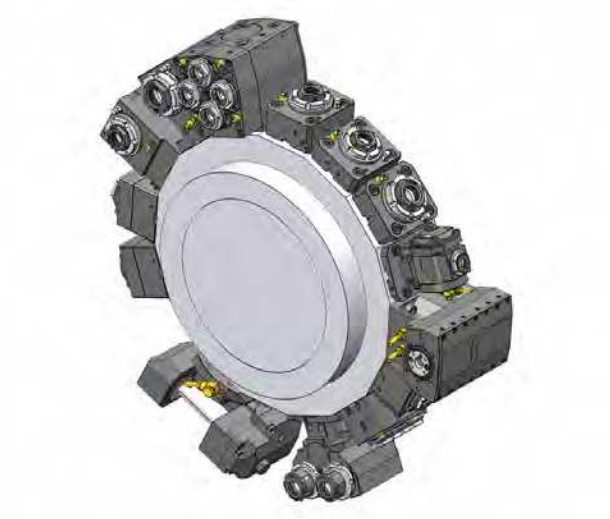

Driven Toolholders - Enhanced Program

Adjustable angle drill/milling unit

ER 16	411010008-40	1:1	EC
	00675000913		
ER 16	411010009-40	1:1	IC 80 bar
	00675000913		
ER 11	411007001-40	1:2	EC
	00675000914		
ER 11	411007002-40	1:2	IC 80 bar
	00675000914		

Gear hobbing unit

Type 16-1	411500017-40	1:1	EC
Type 16-1	411500018-40	2:1	EC
	00675000954		
	160016161 Ø 16		
	160022161 Ø 22		
	160027161 Ø 27		
	160015161 Ø 5/8"		
	160019161 Ø 3/4"		
	160025161 Ø 1"		
	96394		

OD drill/milling unit, both sides

ER 20	413002015-40	1:1	EC
	00675000947		
ER 20	413002018-40	1:1	IC 80 bar
	00675000947		

OD drill/milling unit, double, Y axis

ER 20	413002014-40	1:1	EC
	00675000947		
ER 20	413002017-40	1:1	IC 80 bar
	00675000947		

Driven Toolholders - Enhanced Program

2-spindle - Face drill/milling unit, Y axis

ER 25	413502008-40	1:1	EC
	00675000915		
ER 25	413502009-40	1:1	IC 80 bar
	00675000915		

2-spindle - Face drill/milling unit, both sides, Y axis

ER 25	413502007-40	1:1	EC
	00675000915		

4-spindle - Face drill/milling unit

ER 20	413504001-40	1:1	EC
	00675000947		

4-spindle - Face drill/milling unit, both sides

ER 20	413504000-40	1:1	EC
	00675000947		

Broaching unit for ID and OD

TN765050	414532000-40	1:1	EC

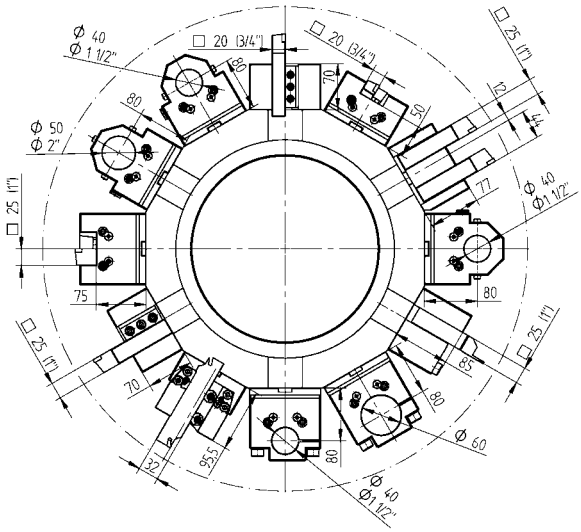

Static Toolholders - Standard Program

OD cutting holder

20	48-T00187 T00187	
25	48-T00186 T00186	
3/4"	48-T00203 T00203	
1"	48-T00202 T00202	

OD cutting holder, HP-IC

25	48-T00186-HP T00186	IC 80 bar
1"	48-T00202-HP T00202	IC 80 bar

Face cutting holder

20	48-T03006 T03006
25	48-T03005 T03005
3/4"	48-T03014 T03014
1"	48-T03013 T03013

Face cutting holder, HP-IC

25	48-T03005-HP T03005	IC 80 bar
1"	48-T03013-HP T03013	IC 80 bar

Cut-off holder, right hand

25	48-T00197 T00197
1"	48-T00198 T00198

Static Toolholders - Standard Program

Boring bar holder

Ø 40	48-T10097 T10097
Ø 50	48-T10098 T10098
Ø 1 1/2"	48-T10101 T10101
Ø 2"	48-T10102 T10102
Ø 2 1/2"	48-70080

Combination toolholder

Ø 40	48-T13128 T13128	IC 80 bar
Ø 50	48-T13139 T13139	IC 80 bar
Ø 1 1/2"	48-T13130 T13130	IC 80 bar
Ø 2"	48-T13140 T13140	IC 80 bar

© WTO GmbH * Subject to change without notice * www.wto.de

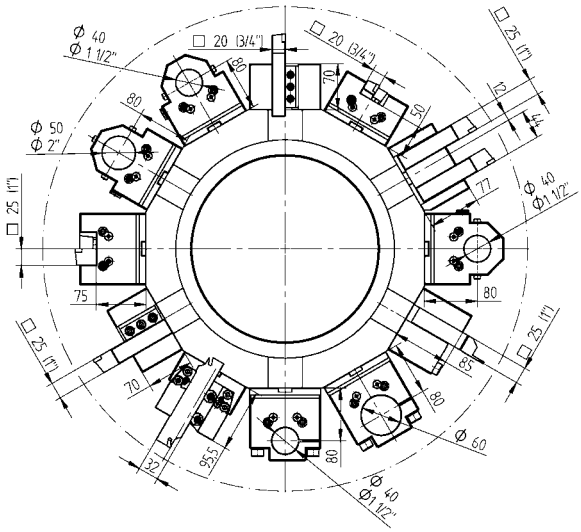

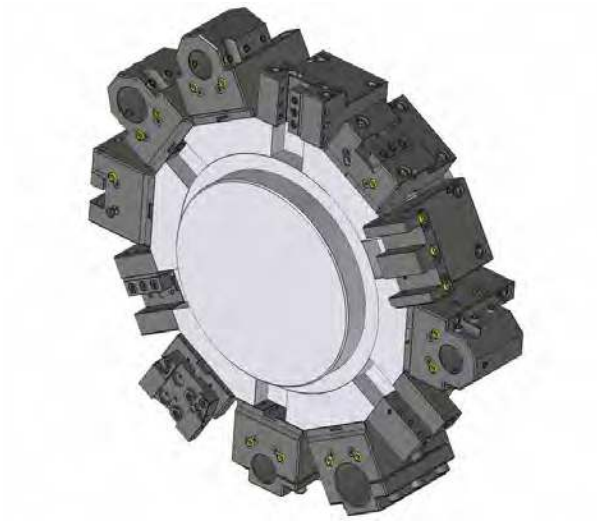

Static Toolholders - Enhanced Program

OD cutting holder, right hand, long, HP-IC

25	48-T00385-HP T00385	IC 80 bar
1"	48-T00386-HP T00386	IC 80 bar

OD cutting holder, left hand, long, HP-IC

25	48-T00387-HP T00387	IC 80 bar
1"	48-T00388-HP T00388	IC 80 bar

OD cutting holder, short

25	48-79591
1"	48-79593

OD cutting holder, extended

25	48-T00236 T00236
1"	48-T00245 T00245

OD cutting holder, double, Y axis

25(1")	48-71865 T00206, T00210

Cut-off holder, adjustable

SH 32	48-98901

Cut-off holder, adjustable, HP-IC

SH 32	48-102262R	IC 80 bar
SH 32	48-102262L	IC 80 bar

Cut-off holder, adjustable, extended

SH 32	48-77478

Static Toolholders - Enhanced Program

Boring bar holder, with slot

Ø 40	48-T10136 T10136
Ø 50	48-T10137 T10137
Ø 60	48-70811
Ø 1 1/2"	48-T10143 T10143
Ø 2"	48-T10142 T10142

VDI adapter, left

VDI 30	48-77127
VDI 40	48-72984

VDI adapter, right

VDI 30	48-74796
VDI 40	48-77955

Boring bar holder, blank

48-81080

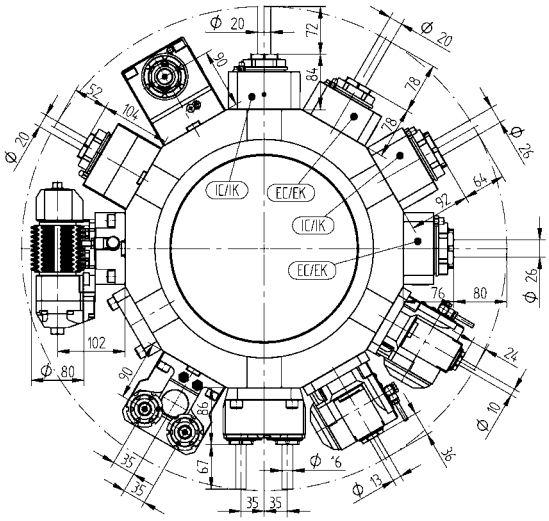

Driven Toolholders - QuickFlex®

OD drill/milling unit (10000 RPM)

ER-32 QF	420132018-60 T32598 0067732000	1:1	EC
ER-32 QF	420132023-60 0067732000	1:1	IC 80 bar

OD drill/milling unit (6000 RPM, Heavy Duty)

ER-32 QF	420132010-60 T32206, T32249 0067732000	1:1	EC
ER-32 QF	420132011-60 T32232, T32478 0067732000	1:1	IC 80 bar
ER-40 QF	420140010-60 T32213 0067740000	1:1	EC
ER-40 QF	420140011-60 T32234 0067740000	1:1	IC 80 bar

Face drill/milling unit (10000 RPM)

ER-32 QF	420532030-60 T32599 0067732000	1:1	EC
ER-32 QF	420532031-60 0067732000	1:1	IC 80 bar

Driven Toolholders - QuickFlex®

Face drill/milling unit (6000 RPM, Heavy Duty)

ER-32 QF	420532010-60 T32207, T32256 0067732000	1:1	EC
ER-32 QF	420532011-60 T32233 0067732000	1:1	IC 80 bar
ER-40 QF	420540012-60 T32214 0067740000	1:1	EC
ER-40 QF	420540013-60 T32235 0067740000	1:1	IC 80 bar

© WTO GmbH * Subject to change without notice * www.wto.de

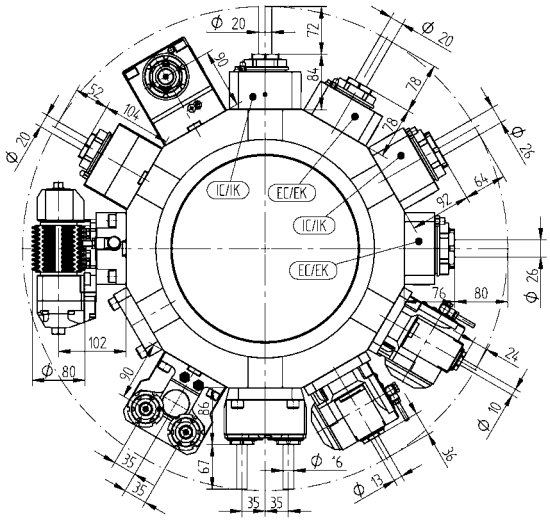

Driven Toolholders - Enhanced Program

OD milling unit with combination mill arbor DIN 6358

Ø 16	410216000-60	1:1	EC
	00675000854		
Ø 22	410222007-60	1:1	EC
	T32268		
	00675000483		
Ø 27	410227008-60	1:1	EC
	00675000245		
Ø 3/4"	410219000-60	1:1	EC
	00675000483		
Ø 1"	410225000-60	1:1	EC
	T32217		
	00675000483		

OD drill/milling unit, offset

ER-32 QF	420132019-60	1:1	EC
	0067732000		
ER-32 QF	420132020-60	1:1	IC 80 bar
	0067732000		
ER-25 QF	420125010-60	1:2	EC
	0067725001		
ER-25 QF	420125011-60	1:2	IC 80 bar
	0067725001		
ER-32 QF	420132021-60	2:1	EC
	0067732000		
ER-32 QF	420132022-60	2:1	IC 80 bar
	0067732000		

Driven Toolholders - Enhanced Program

Face drill/milling unit

ER-25 QF	420525010-60	1:2	EC
	0067725001		
ER-25 QF	420525011-60	1:2	IC 80 bar
	0067725001		
ER-40 QF	420540014-60	2:1	EC
	0067740000		
ER-40 QF	420540015-60	2:1	IC 80 bar
	0067740000		

Face milling unit with combination mill arbor DIN 6358

Ø 22	410622000-60	2:1	EC
	T32269		
	00675000483		
Ø 27	410627000-60	2:1	EC
	00675000245		
Ø 1"	410625000-60	2:1	EC
	T32226		
	00675000483		

Adjustable angle drill/milling unit

ER 20	411013009-60	1:1	EC
	T32474		
	00675000928		
ER 20	411013010-60	1:1	IC 80 bar
	00675000928		
ER 16	411010001-60	1:2	EC
	00675000936		
ER 16	411010002-60	1:2	IC 80 bar
	00675000936		

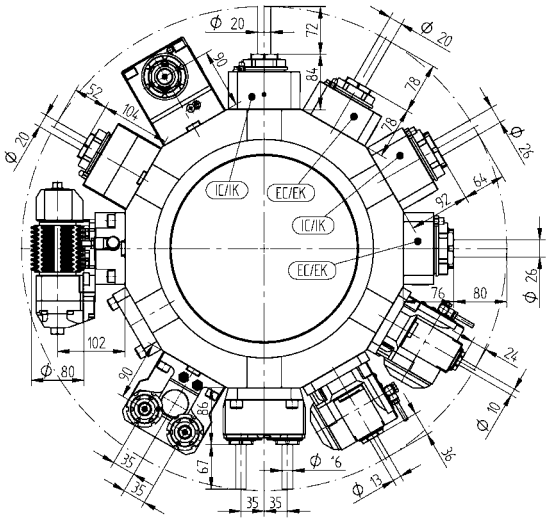

Driven Toolholders - Enhanced Program

Slitting saw unit

Type 19-2	411500006-60	3:1	EC
	00675000855		
	160022192 Ø 22		
	160027192 Ø 27		
	160032192 Ø 32		
	160040192 Ø 40		
	160023192 Ø 7/8"		
	160025192 Ø 1"		
	160031192 Ø 1 1/4"		
	160038192 Ø 1 1/2"		

Gear hobbing unit

Type 16-1	411500007-60	1:1	EC
Type 16-1	411500008-60	2:1	EC
	00675000926		
	160016161 Ø 16		
	160022161 Ø 22		
	160027161 Ø 27		
	160015161 Ø 5/8"		
	160019161 Ø 3/4"		
	160025161 Ø 1"		
	96394		

OD drill/milling unit, double, Y axis

ER 25	413002000-60 T32267	1:1	EC
	00675000907		

Driven Toolholders - Enhanced Program

2-spindle - Face drill/milling unit, Y axis

ER 25	413502000-60 T32264	1:1	EC
	00675000915		
ER 25	413502002-60	1:1	IC 80 bar
	00675000915		

Broaching unit for ID and OD

TN765050	414532000-60	1:1	EC

© WTO GmbH * Subject to change without notice * www.wto.de

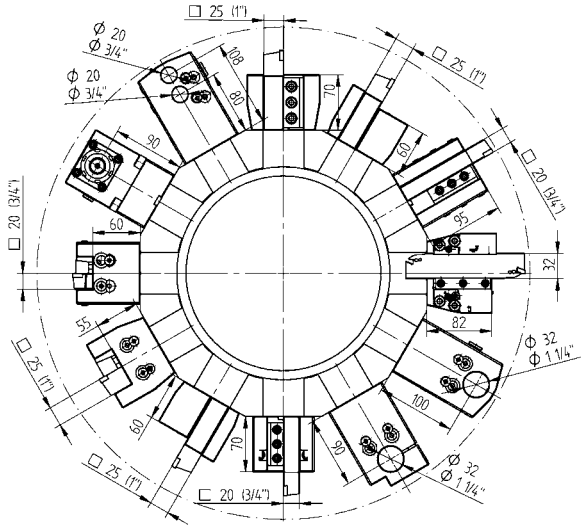

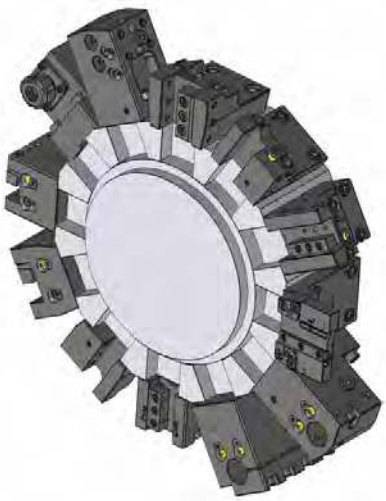

Static Toolholders - Standard Program

OD cutting holder, short

20	48-T00224 T00224	
25	48-T00267 T00267	
3/4"	48-T00234 T00234	
1"	48-T00272 T00272	

OD cutting holder, short, HP-IC

20	48-T00224-HP T00224	IC 80 bar
25	48-T00267-HP T00267	IC 80 bar
3/4"	48-T00234-HP T00234	IC 80 bar
1"	48-T00272-HP T00272	IC 80 bar

OD cutting holder, long

20	48-T00225 T00225
3/4"	48-T00235 T00235

Face cutting holder

20	48-T03017 T03017
25	48-T03024 T03024
3/4"	48-T03018 T03018
1"	48-T03025 T03025

Face cutting holder, HP-IC

20	48-T03017-HP T03017	IC 80 bar
3/4"	48-T03018-HP T03018	IC 80 bar

Static Toolholders - Standard Program

Cut-off holder, right hand

20	48-T00251 T00251
25	48-T00268 T00268, T00356
3/4"	48-T00252 T00252
1"	48-T00359 T00359, T00357

Boring bar holder

Ø 32	48-T10115 T10115
Ø 1 1/4"	48-T10119 T10119

Combination toolholder

Ø 32	48-T13132 T13132	IC 80 bar
Ø 40	48-77999	IC 80 bar
Ø 1 1/4"	48-T13135 T13135	IC 80 bar
Ø 1 1/2"	48-80016	IC 80 bar

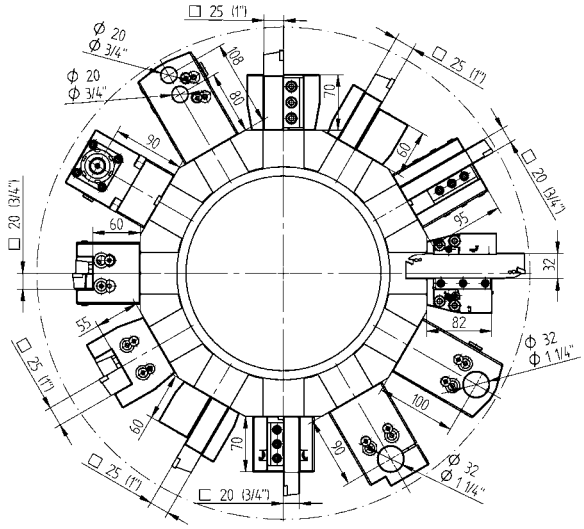

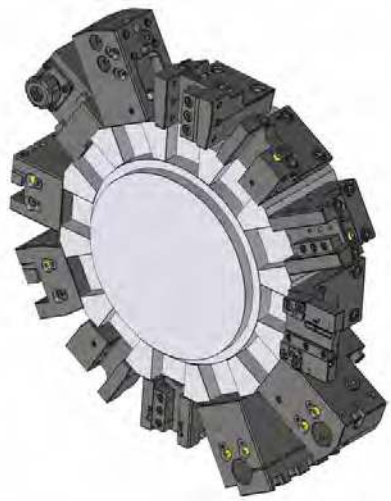

Static Toolholders - Enhanced Program

Cut-off holder, adjustable

SH 32	48-98891	

Cut-off holder, adjustable, HP-IC

SH 32	48-102261R	IC 80 bar
SH 32	48-102261L	IC 80 bar

Boring bar holder, with slot

Ø 32	48-82057
Ø 40	48-82058
Ø 1 1/4"	48-82059
Ø 1 1/2"	48-82060

Boring bar holder, double, universal

Ø 20	48-75406
Ø 3/4"	48-75416

Collet face drill holder

ER 25	48-107230	IC 80 bar
	107525000	
ER 32	48-81031	IC 80 bar
	107532000	

VDI adapter, left

VDI 30	48-77732

VDI adapter, right

VDI 30	48-78687

Boring bar holder, blank

48-80506

© WTO GmbH * Subject to change without notice * www.wto.de

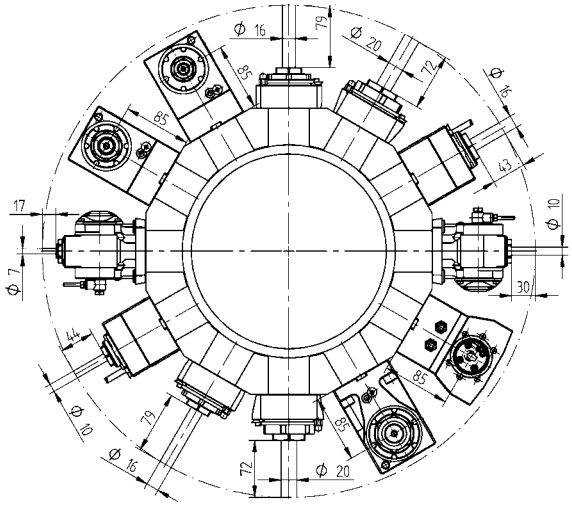

Driven Toolholders - QuickFlex®

OD drill/milling unit (12000 RPM)

ER-25 QF	420125012-40 T32433 0067725000	1:1	EC
ER-25 QF	420125013-40 0067725000	1:1	IC 80 bar

OD drill/milling unit (6000 RPM, Heavy Duty)

ER-25 QF	420125010-40 T32274, T32450 0067725000	1:1	EC
ER-25 QF	420125011-40 T32287 0067725000	1:1	IC 80 bar
ER-32 QF	420132010-40 T32475, T32484 0067732000	1:1	EC
ER-32 QF	420132011-40 0067732000	1:1	IC 80 bar

Face drill/milling unit (12000 RPM)

ER-25 QF	420525013-40 T32434 0067725000	1:1	EC
ER-25 QF	420525014-40 T32436 0067725000	1:1	IC 80 bar

Driven Toolholders - QuickFlex®

Face drill/milling unit (6000 RPM, Heavy Duty)

ER-25 QF	420525010-40 T32275, T32297 0067725000	1:1	EC
ER-25 QF	420525011-40 T32288, T32435 0067725000	1:1	IC 80 bar
ER-32 QF	420532010-40 T32476, T32485 0067732000	1:1	EC
ER-32 QF	420532011-40 0067732000	1:1	IC 80 bar

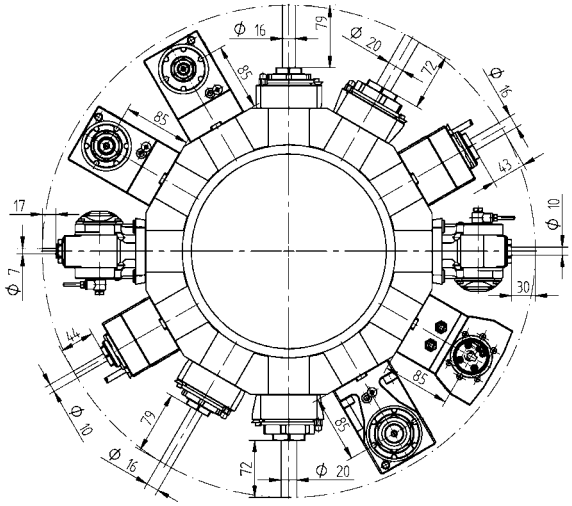

Driven Toolholders - Enhanced Program

OD drill/milling unit, offset

ER 25	410116050-40 T32279, T32488 00675000932	1:1	EC
ER 25	410116057-40 00675000932	1:1	IC 80 bar
ER 20	410113060-40 00675000939	1:2	EC
ER 20	410113068-40 00675000939	1:2	IC 80 bar
ER 16	410410003-40 00675000937	1:3	EC
ER 16	410410004-40 00675000937	1:3	IC 80 bar
ER 25	410116051-40 00675000932	2:1	EC
ER 25	410116058-40 00675000932	2:1	IC 80 bar

OD drill/milling unit, offset (12000 RPM)

ER 25	410116060-40 00675000932	1:1	EC
ER 25	410116059-40 00675000932	1:1	IC 80 bar

Driven Toolholders - Enhanced Program

Face drill/milling unit

ER-20 QF	420520010-40 0067720001	1:2	EC
ER-20 QF	420520011-40 0067720001	1:2	IC 80 bar
ER-20 QF	420820010-40 0067720001	1:3	EC
ER-20 QF	420820011-40 0067720001	1:3	IC 80 bar
ER-32 QF	420532013-40 0067732000	2:1	EC
ER-32 QF	420532014-40 0067732000	2:1	IC 80 bar

Adjustable angle drill/milling unit

ER 16	411010008-40 00675000913	1:1	EC
ER 16	411010009-40 00675000913	1:1	IC 80 bar
ER 11	411007001-40 00675000914	1:2	EC
ER 11	411007002-40 00675000914	1:2	IC 80 bar

Broaching unit for ID and OD

TN765050	414532000-40	1:1	EC

© WTO GmbH * Subject to change without notice * www.wto.de

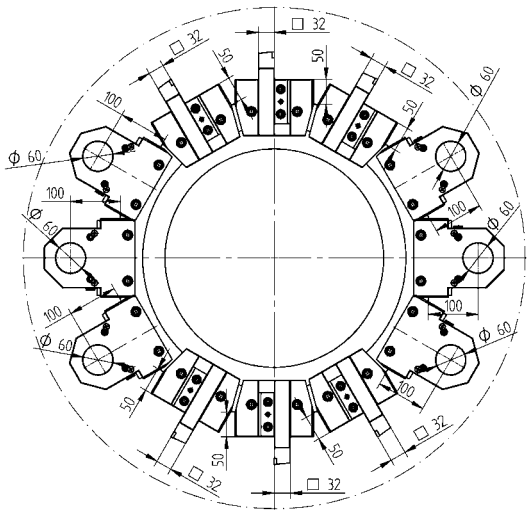

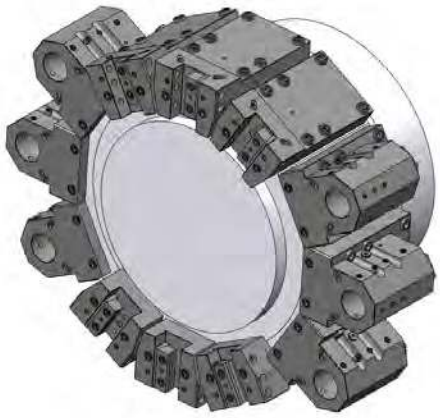

Static Toolholders - Standard Program

OD cutting holder

32	48-T00372 T00372	

Combination toolholder

Ø 60	48-T10168 T10168	IC 80 bar

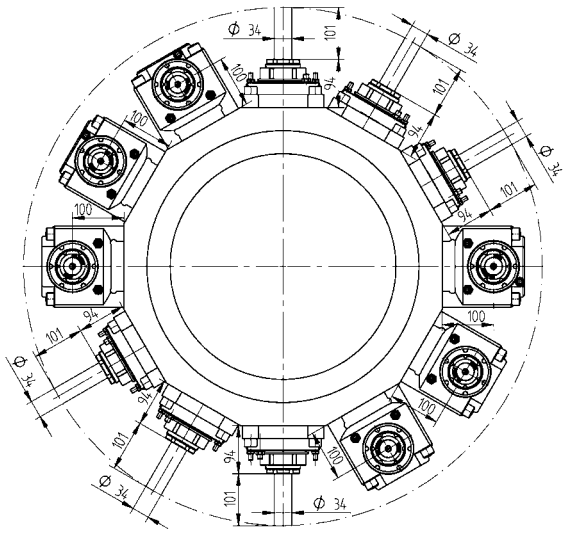

Driven Toolholders - Performance Series

OD drill/milling unit

ER 50	420150000-A1 T32495 0067550000	1:1	EC
ER 50	420150001-A1 0067550000	1:1	IC 80 bar

Face drill/milling unit

ER 50	420550000-A1 T32496 0067550000	1:1	EC
ER 50	420550001-A1 0067550000	1:1	IC 80 bar

Driven Toolholders - QuickFlex®

OD drill/milling unit

ER-50 QF	420150010-A1 T32495 0067750000	1:1	EC
ER-50 QF	420150011-A1 0067750000	1:1	IC 80 bar

Face drill/milling unit

ER-50 QF	420550010-A1 T32496 0067750000	1:1	EC
ER-50 QF	420550011-A1 0067750000	1:1	IC 80 bar

© WTO GmbH * Subject to change without notice * www.wto.de

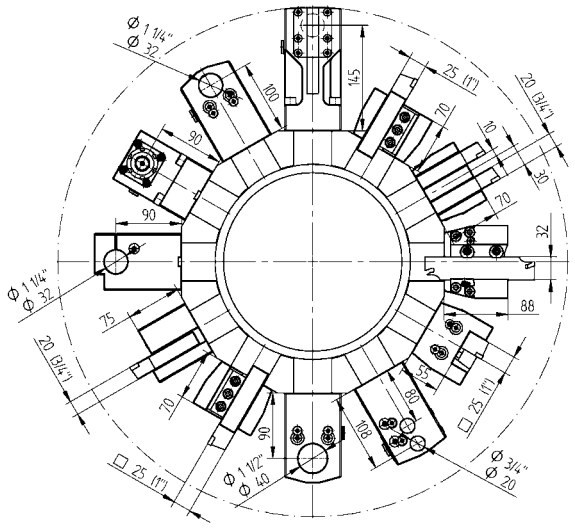

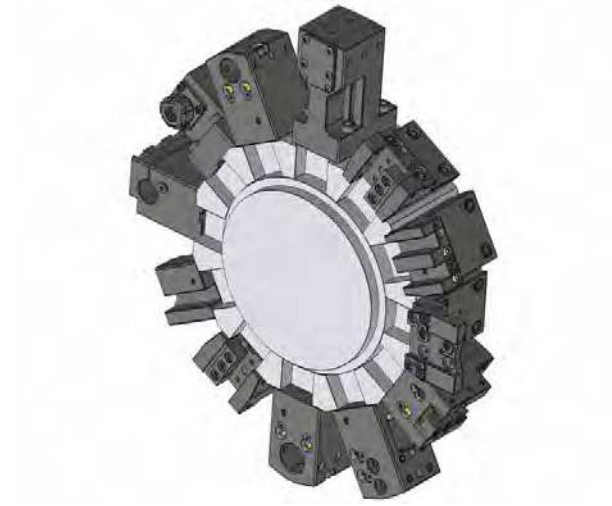

Static Toolholders - Standard Program

OD cutting holder, short

20	48-T00224 T00224	
25	48-T00267 T00267	
3/4"	48-T00234 T00234	
1"	48-T00272 T00272	

OD cutting holder, short, HP-IC

20	48-T00224-HP T00224	IC 80 bar
25	48-T00267-HP T00267	IC 80 bar
3/4"	48-T00234-HP T00234	IC 80 bar
1"	48-T00272-HP T00272	IC 80 bar

OD cutting holder, long

20	48-T00225 T00225
3/4"	48-T00235 T00235

OD cutting holder, both sides, short

20	48-T00228 T00228
25	48-86523
3/4"	48-T00250 T00250
1"	48-86524

OD cutting holder, both sides, short, HP-IC

20	48-T00228-HP T00228	IC 80 bar
25	48-86523-HP	IC 80 bar
3/4"	48-T00250-HP T00250	IC 80 bar
1"	48-86524-HP	IC 80 bar

Static Toolholders - Standard Program

OD cutting holder, both sides, long

20	48-T00226 T00226
3/4"	48-T00249 T00249

Face cutting holder

20	48-T03017 T03017
25	48-T03024 T03024
3/4"	48-T03018 T03018
1"	48-T03025 T03025

Face cutting holder, HP-IC

20	48-T03017-HP T03017	IC 80 bar
3/4"	48-T03018-HP T03018	IC 80 bar

Cut-off holder, right hand

20	48-T00251 T00251
25	48-T00268 T00268, T00356
3/4"	48-T00252 T00252
1"	48-T00359 T00359, T00357

Combination toolholder

Ø 32	48-T13132 T13132	IC 80 bar
Ø 40	48-77999	IC 80 bar
Ø 1 1/4"	48-T13135 T13135	IC 80 bar
Ø 1 1/2"	48-80016	IC 80 bar

Combination toolholder, sub spindle

Ø 32	48-T10260 T10260	IC 80 bar
Ø 1 1/4"	48-T10261 T10261	IC 80 bar

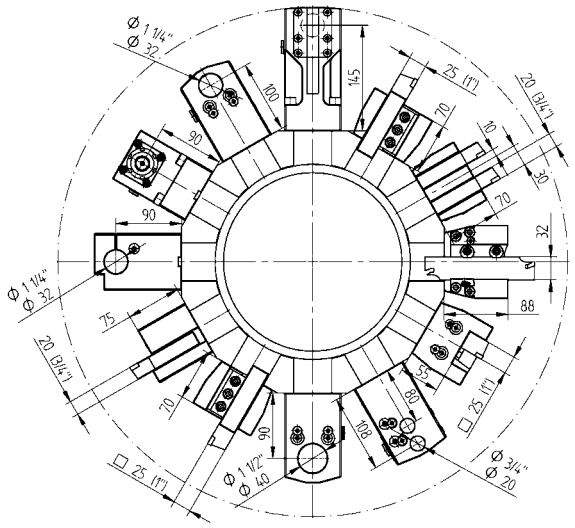

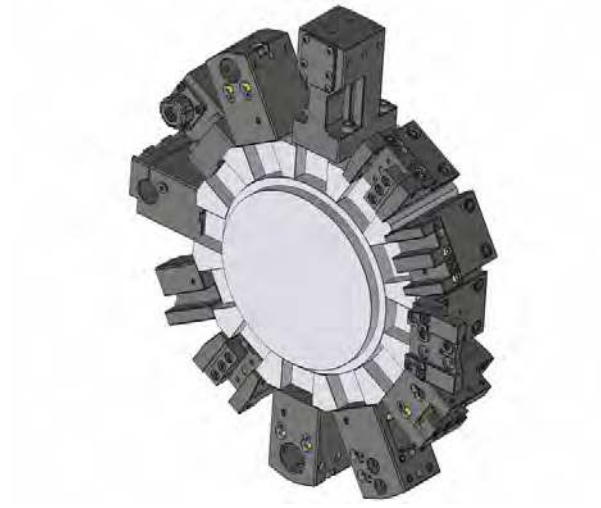

Static Toolholders - Enhanced Program

OD cutting holder, double, Y axis

20 (3/4")	48-77726

OD cutting holder, both sides, short, extended

20	48-79403
3/4"	48-82167

OD cutting holder, both sides, long, extended

20	48-81414
3/4"	48-82168

Cut-off holder, adjustable

SH 32	48-98891

Cut-off holder, adjustable, HP-IC

SH 32	48-102261R	IC 80 bar
SH 32	48-102261L	IC 80 bar

Boring bar holder, with slot

Ø 32	48-82057
Ø 40	48-82058
Ø 1 1/4"	48-82059
Ø 1 1/2"	48-82060

Boring bar holder, double, universal

Ø 20	48-75406
Ø 3/4"	48-75416

Collet face drill holder

ER 25	48-107230	IC 80 bar
	107525000	
ER 32	48-81031	IC 80 bar
	107532000	

Static Toolholders - Enhanced Program

VDI adapter, left

VDI 30	48-77732

VDI adapter, right

VDI 30	48-78687

Boring bar holder, blank

48-80506

© WTO GmbH * Subject to change without notice * www.wto.de

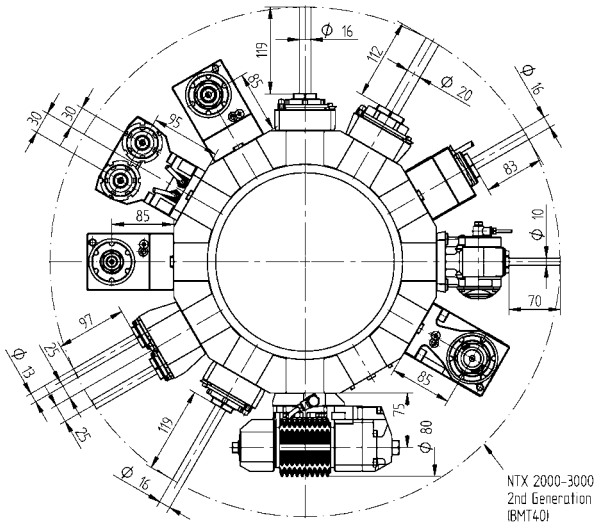

Driven Toolholders - QuickFlex®

OD drill/milling unit (12000 RPM)

ER-25 QF	420125012-40 T32433 0067725000	1:1	EC
ER-25 QF	420125013-40 0067725000	1:1	IC 80 bar

OD drill/milling unit (6000 RPM, Heavy Duty)

ER-25 QF	420125010-40 T32274, T32450 0067725000	1:1	EC
ER-25 QF	420125011-40 T32287 0067725000	1:1	IC 80 bar
ER-32 QF	420132010-40 T32475, T32484 0067732000	1:1	EC
ER-32 QF	420132011-40 0067732000	1:1	IC 80 bar

Face drill/milling unit (12000 RPM)

ER-25 QF	420525013-40 T32434 0067725000	1:1	EC
ER-25 QF	420525014-40 T32436 0067725000	1:1	IC 80 bar

Driven Toolholders - QuickFlex®

Face drill/milling unit (6000 RPM, Heavy Duty)

ER-25 QF	420525010-40 T32275, T32297 0067725000	1:1	EC
ER-25 QF	420525011-40 T32288, T32435 0067725000	1:1	IC 80 bar
ER-32 QF	420532010-40 T32476, T32485 0067732000	1:1	EC
ER-32 QF	420532011-40 0067732000	1:1	IC 80 bar

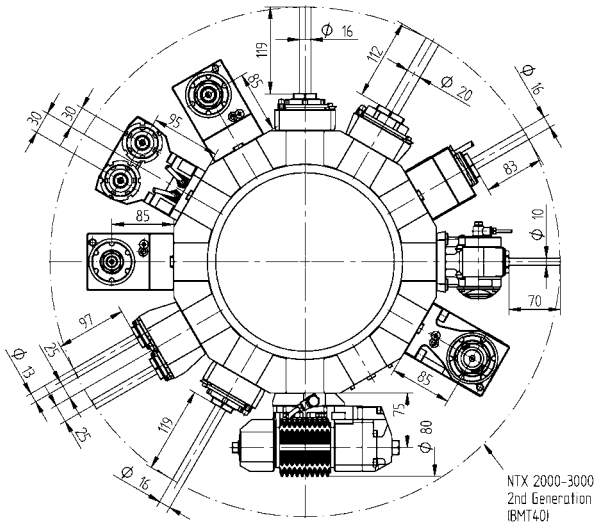

Driven Toolholders - Enhanced Program

OD milling unit with combination mill arbor DIN 6358

Ø 16	410216010-40	1:1	EC
	00675000854		
Ø 22	410222016-40	1:1	EC
	T32280, T32486		
	00675000483		
Ø 3/4"	410219003-40	1:1	EC
	00675000483		

OD drill/milling unit, offset

ER 25	410116050-40	1:1	EC
	T32279, T32488		
	00675000932		
ER 25	410116057-40	1:1	IC 80 bar
	00675000932		
ER 20	410113060-40	1:2	EC
	00675000939		
ER 20	410113068-40	1:2	IC 80 bar
	00675000939		
ER 16	410410003-40	1:3	EC
	00675000937		
ER 16	410410004-40	1:3	IC 80 bar
	00675000937		
ER 25	410116051-40	2:1	EC
	00675000932		
ER 25	410116058-40	2:1	IC 80 bar
	00675000932		

OD drill/milling unit, offset (12000 RPM)

ER 25	410116060-40	1:1	EC
	00675000932		
ER 25	410116059-40	1:1	IC 80 bar
	00675000932		

Driven Toolholders - Enhanced Program

Face drill/milling unit

ER-20 QF	420520010-40	1:2	EC
	0067720001		
ER-20 QF	420520011-40	1:2	IC 80 bar
	0067720001		
ER-20 QF	420820010-40	1:3	EC
	0067720001		
ER-20 QF	420820011-40	1:3	IC 80 bar
	0067720001		
ER-32 QF	420532013-40	2:1	EC
	0067732000		
ER-32 QF	420532014-40	2:1	IC 80 bar
	0067732000		

Face milling unit with combination mill arbor DIN 6358

Ø 16	410616013-40	1:1	EC
	00675000854		
Ø 22	410622030-40	1:1	EC
	00675000483		
Ø 22	410622029-40	2:1	EC
	T32292, T32487		
	00675000160		
Ø 3/4"	410619003-40	1:1	EC
	00675000483		
Ø 1"	410625002-40	2:1	EC
	00675000160		

Right angle back set drill/milling unit, sub spindle (only for NTX 1000 / SZM 2nd Generation)

ER-25 QF	420525047-40	1:1	EC
	0067725010		
ER-25 QF	420525048-40	1:1	IC 80 bar
	0067725010		

© WTO GmbH * Subject to change without notice * www.wto.de

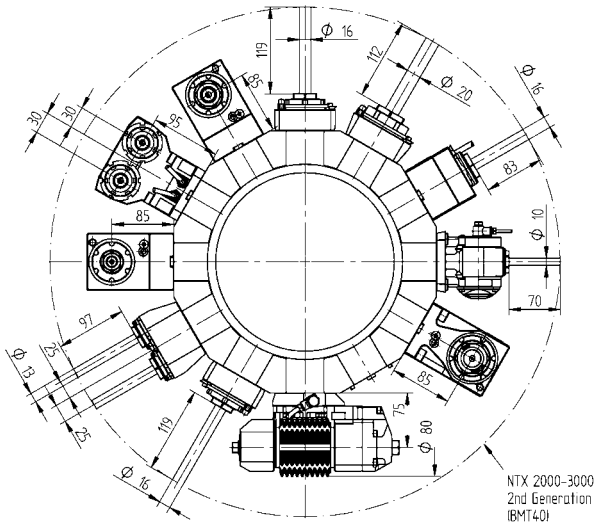

Driven Toolholders - Enhanced Program

Adjustable angle drill/milling unit

ER 16	411010008-40	1:1	EC
	00675000913		
ER 16	411010009-40	1:1	IC 80 bar
	00675000913		
ER 11	411007001-40	1:2	EC
	00675000914		
ER 11	411007002-40	1:2	IC 80 bar
	00675000914		

Gear hobbing unit

Type 16-1	411500017-40	1:1	EC
Type 16-1	411500018-40	2:1	EC
	00675000954		
	160016161 Ø 16		
	160022161 Ø 22		
	160027161 Ø 27		
	160015161 Ø 5/8"		
	160019161 Ø 3/4"		
	160025161 Ø 1"		
	96394		

OD drill/milling unit, both sides

ER 20	413002015-40	1:1	EC
	00675000947		
ER 20	413002018-40	1:1	IC 80 bar
	00675000947		

OD drill/milling unit, double, Y axis

ER 20	413002014-40	1:1	EC
	00675000947		
ER 20	413002017-40	1:1	IC 80 bar
	00675000947		

Driven Toolholders - Enhanced Program

2-spindle - Face drill/milling unit, Y axis

ER 25	413502008-40	1:1	EC
	00675000915		
ER 25	413502009-40	1:1	IC 80 bar
	00675000915		

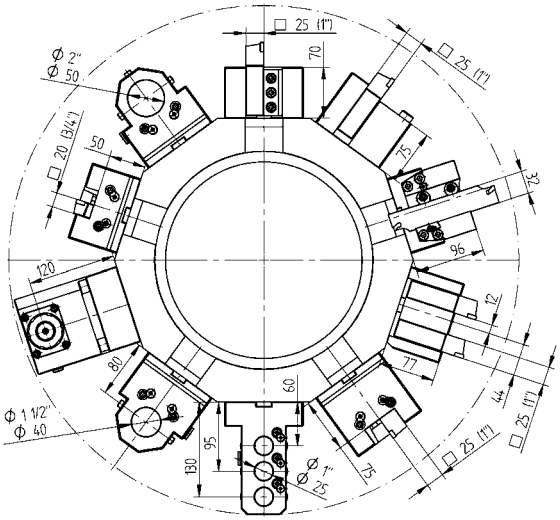

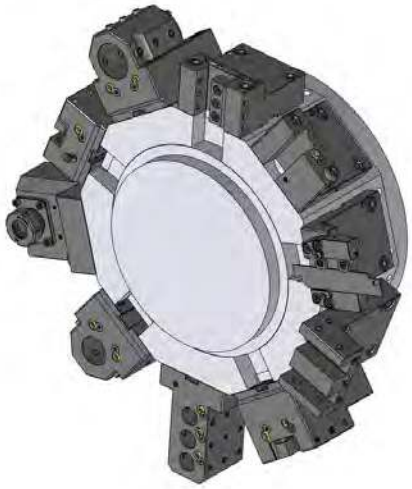

Static Toolholders - Standard Program

OD cutting holder

20	48-T00187 T00187	
25	48-T00186 T00186	
3/4"	48-T00203 T00203	
1"	48-T00202 T00202	

OD cutting holder, HP-IC

25	48-T00186-HP T00186	IC 80 bar
1"	48-T00202-HP T00202	IC 80 bar

OD cutting holder, both sides

20	48-T00185 T00185
25	48-T00184 T00184
3/4"	48-T00201 T00201
1"	48-T00199 T00199

OD cutting holder, both sides, HP-IC

25	48-T00184-HP T00184	IC 80 bar
1"	48-T00199-HP T00199	IC 80 bar

OD cutting holder, both sides, long

25	48-T00237 T00237
1"	48-78257

Static Toolholders - Standard Program

Face cutting holder

20	48-T03006 T03006
25	48-T03005 T03005
3/4"	48-T03014 T03014
1"	48-T03013 T03013

Face cutting holder, HP-IC

25	48-T03005-HP T03005	IC 80 bar
1"	48-T03013-HP T03013	IC 80 bar

Cut-off holder, right hand

25	48-T00197 T00197
1"	48-T00198 T00198

Boring bar holder

Ø 40	48-T10097 T10097
Ø 50	48-T10098 T10098
Ø 1 1/2"	48-T10101 T10101
Ø 2"	48-T10102 T10102
Ø 2 1/2"	48-70080

Combination toolholder

Ø 40	48-T13128 T13128	IC 80 bar
Ø 50	48-T13139 T13139	IC 80 bar
Ø 1 1/2"	48-T13130 T13130	IC 80 bar
Ø 2"	48-T13140 T13140	IC 80 bar

© WTO GmbH * Subject to change without notice * www.wto.de

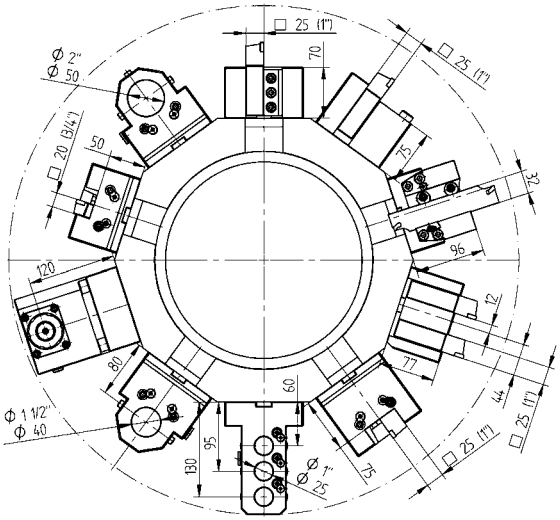

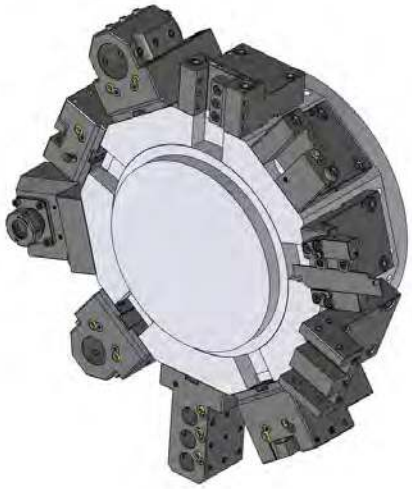

Static Toolholders - Enhanced Program

OD cutting holder, right hand, long, HP-IC

25	48-T00385-HP T00385	IC 80 bar
1"	48-T00386-HP T00386	IC 80 bar

OD cutting holder, left hand, long, HP-IC

25	48-T00387-HP T00387	IC 80 bar
1"	48-T00388-HP T00388	IC 80 bar

OD cutting holder, double, Y axis

25(1")	48-71865 T00206, T00210

OD cutting holder, both sides, double, Y axis

25(1")	48-71863 T00253, T00258

Cut-off holder, adjustable

SH 32	48-98901

Cut-off holder, adjustable, HP-IC

SH 32	48-102262R	IC 80 bar
SH 32	48-102262L	IC 80 bar

Cut-off holder, adjustable, extended

SH 32	48-77478

Static Toolholders - Enhanced Program

Boring bar holder, with slot

Ø 40	48-T10136 T10136
Ø 50	48-T10137 T10137
Ø 60	48-70811
Ø 1 1/2"	48-T10143 T10143
Ø 2"	48-T10142 T10142

Boring bar holder, triple, universal

Ø 25	48-T10104 T10104
Ø 1"	48-T10107 T10107

Collet face drill holder

ER 32	48-94564 107532000	IC 80 bar
ER 40	48-94566 107540000	IC 80 bar

Collet face drill holder, both sides

ER 32	48-94565 107532000	IC 80 bar
ER 40	48-94567 107540000	IC 80 bar

VDI adapter, left

VDI 30	48-77127
VDI 40	48-72984

VDI adapter, right

VDI 30	48-74796
VDI 40	48-77955

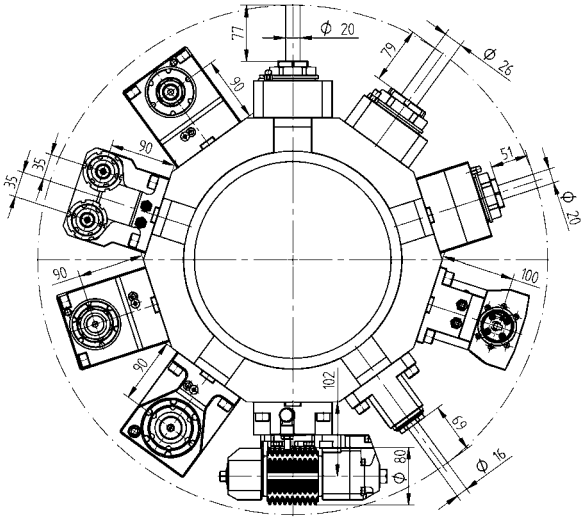

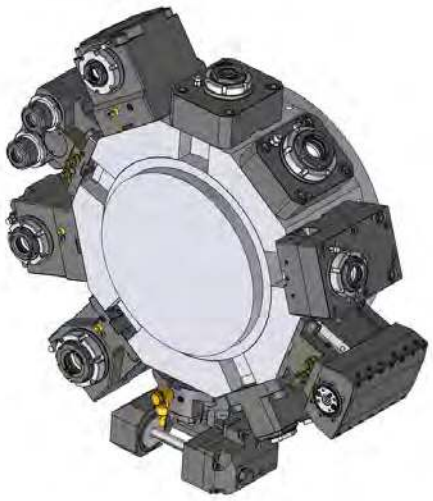

Driven Toolholders - QuickFlex®

OD drill/milling unit (6000 RPM, Heavy Duty)

ER-32 QF	420132010-60 T32206, T32249 0067732000	1:1	EC
ER-32 QF	420132011-60 T32232, T32478 0067732000	1:1	IC 80 bar
ER-40 QF	420140010-60 T32213 0067740000	1:1	EC
ER-40 QF	420140011-60 T32234 0067740000	1:1	IC 80 bar

Face drill/milling unit (6000 RPM, Heavy Duty)

ER-32 QF	420532010-60 T32207, T32256 0067732000	1:1	EC
ER-32 QF	420532011-60 T32233 0067732000	1:1	IC 80 bar
ER-40 QF	420540012-60 T32214 0067740000	1:1	EC
ER-40 QF	420540013-60 T32235 0067740000	1:1	IC 80 bar

Driven Toolholders - Enhanced Program

OD milling unit with combination mill arbor DIN 6358

Ø 16	410216000-60 00675000854	1:1	EC
Ø 22	410222007-60 T32268 00675000483	1:1	EC
Ø 27	410227008-60 00675000245	1:1	EC
Ø 3/4"	410219000-60 00675000483	1:1	EC
Ø 1"	410225000-60 T32217 00675000483	1:1	EC

OD drill/milling unit, offset

ER-32 QF	420132019-60 0067732000	1:1	EC
ER-32 QF	420132020-60 0067732000	1:1	IC 80 bar
ER-25 QF	420125010-60 0067725001	1:2	EC
ER-25 QF	420125011-60 0067725001	1:2	IC 80 bar
ER-32 QF	420132021-60 0067732000	2:1	EC
ER-32 QF	420132022-60 0067732000	2:1	IC 80 bar

© WTO GmbH * Subject to change without notice * www.wto.de

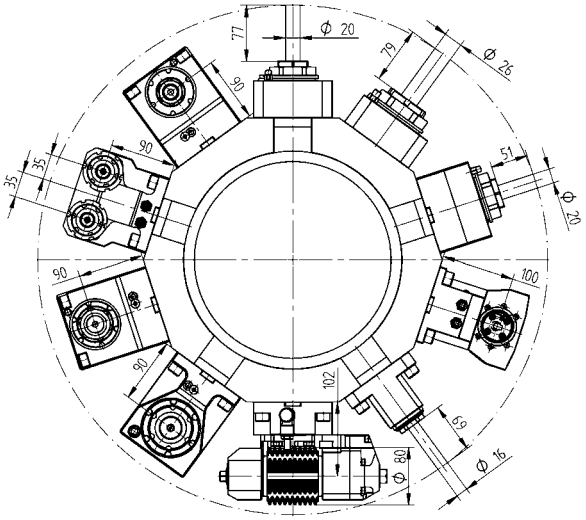

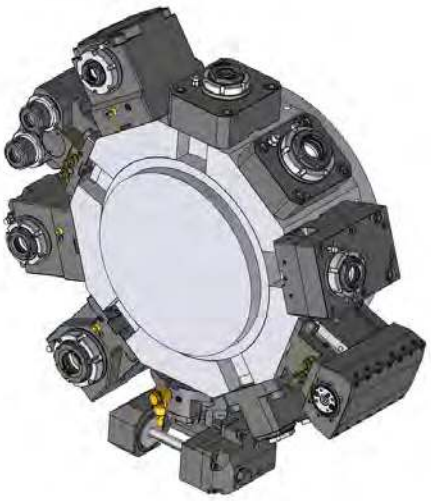

Driven Toolholders - Enhanced Program

Face drill/milling unit

ER-25 QF	420525010-60	1:2	EC
	0067725001		
ER-25 QF	420525011-60	1:2	IC 80 bar
	0067725001		
ER-40 QF	420540014-60	2:1	EC
	0067740000		
ER-40 QF	420540015-60	2:1	IC 80 bar
	0067740000		

Face milling unit with combination mill arbor DIN 6358

Ø 22	410622000-60	2:1	EC
	T32269		
	00675000483		
Ø 27	410627000-60	2:1	EC
	00675000245		
Ø 1"	410625000-60	2:1	EC
	T32226		
	00675000483		

Adjustable angle drill/milling unit

ER 20	411013009-60	1:1	EC
	T32474		
	00675000928		
ER 20	411013010-60	1:1	IC 80 bar
	00675000928		
ER 16	411010001-60	1:2	EC
	00675000936		
ER 16	411010002-60	1:2	IC 80 bar
	00675000936		

Driven Toolholders - Enhanced Program

Slitting saw unit

Type 19-2	411500006-60	3:1	EC
	00675000855		
	160022192 Ø 22		
	160027192 Ø 27		
	160032192 Ø 32		
	160040192 Ø 40		
	160023192 Ø 7/8"		
	160025192 Ø 1"		
	160031192 Ø 1 1/4"		
	160038192 Ø 1 1/2"		

Gear hobbing unit

Type 16-1	411500007-60	1:1	EC
Type 16-1	411500008-60	2:1	EC
	00675000926		
	160016161 Ø 16		
	160022161 Ø 22		
	160027161 Ø 27		
	160015161 Ø 5/8"		
	160019161 Ø 3/4"		
	160025161 Ø 1"		
	96394		

OD drill/milling unit, both sides

ER 25	413002001-60	1:1	EC
	00675000907		

OD drill/milling unit, double, Y axis

ER 25	413002000-60	1:1	EC
	T32267		
	00675000907		

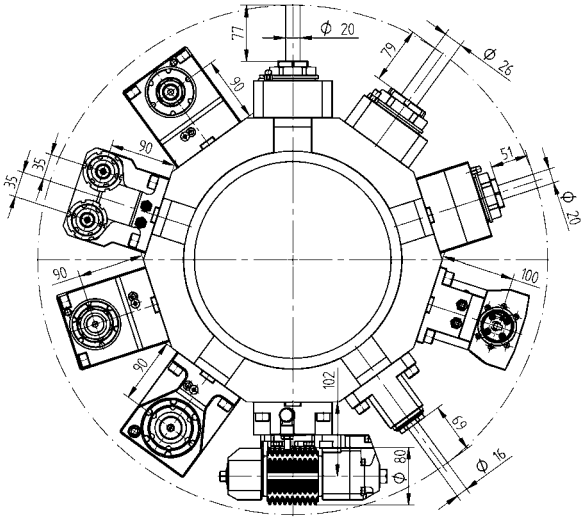

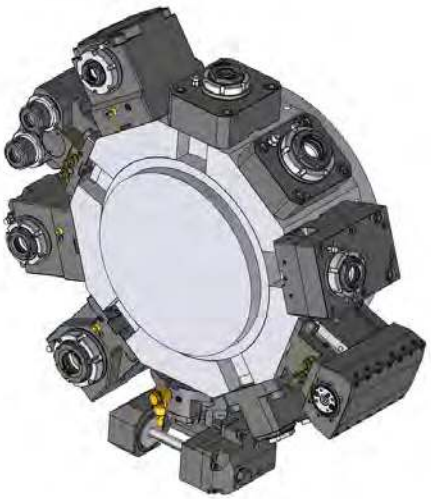

Driven Toolholders - Enhanced Program

2-spindle - Face drill/milling unit, Y axis

ER 25	413502000-60 T32264 00675000915	1:1	EC
ER 25	413502002-60 00675000915	1:1	IC 80 bar

Broaching unit for ID and OD

TN765050	414532000-60	1:1	EC

© WTO GmbH * Subject to change without notice * www.wto.de

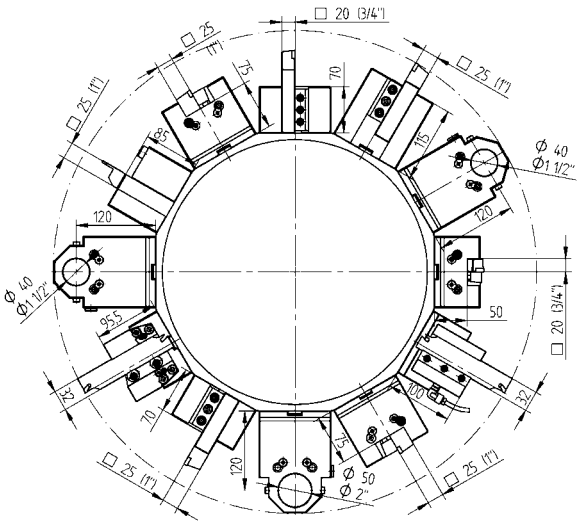

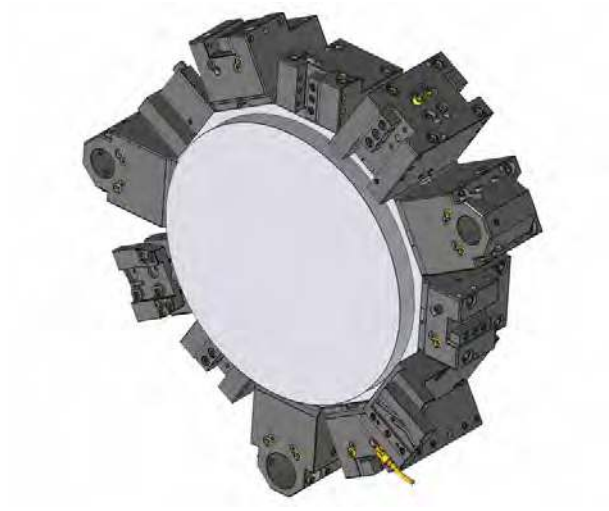

Static Toolholders - Standard Program

OD cutting holder

20	48-T00187 T00187	
25	48-T00186 T00186	
3/4"	48-T00203 T00203	
1"	48-T00202 T00202	

OD cutting holder, HP-IC

25	48-T00186-HP T00186	IC 80 bar
1"	48-T00202-HP T00202	IC 80 bar

OD cutting holder, both sides

20	48-T00185 T00185
25	48-T00184 T00184
3/4"	48-T00201 T00201
1"	48-T00199 T00199

OD cutting holder, both sides, HP-IC

25	48-T00184-HP T00184	IC 80 bar
1"	48-T00199-HP T00199	IC 80 bar

OD cutting holder, both sides, long

25	48-T00237 T00237
1"	48-78257

Static Toolholders - Standard Program

Face cutting holder

20	48-T03006 T03006
25	48-T03005 T03005
3/4"	48-T03014 T03014
1"	48-T03013 T03013

Face cutting holder, HP-IC

25	48-T03005-HP T03005	IC 80 bar
1"	48-T03013-HP T03013	IC 80 bar

Cut-off holder, right hand

25	48-T00197 T00197
1"	48-T00198 T00198

Boring bar holder, long

Ø 40	48-T10113 T10113
Ø 50	48-T10114 T10114
Ø 1 1/2"	48-T10134 T10134
Ø 2"	48-T10135 T10135

Combination toolholder, long

Ø 40	48-T13131 T13131	IC 80 bar
Ø 50	48-77902	IC 80 bar
Ø 1 1/2"	48-T13137 T13137	IC 80 bar
Ø 2"	48-77901	IC 80 bar

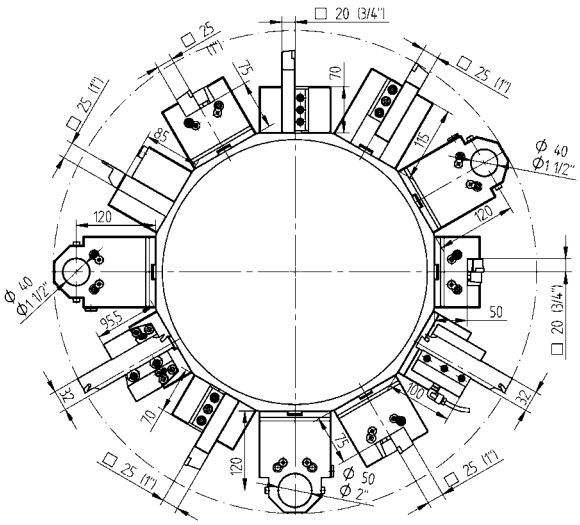

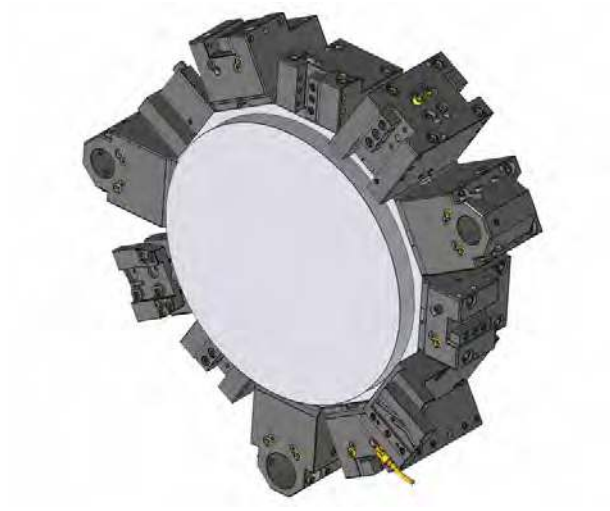

Static Toolholders - Enhanced Program

OD cutting holder, right hand, long, HP-IC

25	48-T00385-HP T00385	IC 80 bar
1"	48-T00386-HP T00386	IC 80 bar

OD cutting holder, left hand, long, HP-IC

25	48-T00387-HP T00387	IC 80 bar
1"	48-T00388-HP T00388	IC 80 bar

OD cutting holder, extended

25	48-76267
1"	48-81553

OD cutting holder, both sides, extended

25	48-81627
1"	48-82499

Face cutting holder, both sides

25	48-78995
1"	48-78996

Cut-off holder, adjustable

SH 32	48-98901

Cut-off holder, adjustable, HP-IC

SH 32	48-102262R	IC 80 bar
SH 32	48-102262L	IC 80 bar

Cut-off holder, adjustable, extended

SH 32	48-77478

Static Toolholders - Enhanced Program

Collet face drill holder

ER 32	48-94564 107532000	IC 80 bar
ER 40	48-94566 107540000	IC 80 bar

Collet face drill holder, both sides

ER 32	48-94565 107532000	IC 80 bar
ER 40	48-94567 107540000	IC 80 bar

VDI adapter, left

VDI 30	48-77127
VDI 40	48-72984

VDI adapter, right

VDI 30	48-74796
VDI 40	48-77955

Boring bar holder, blank

48-81081

© WTO GmbH * Subject to change without notice * www.wto.de

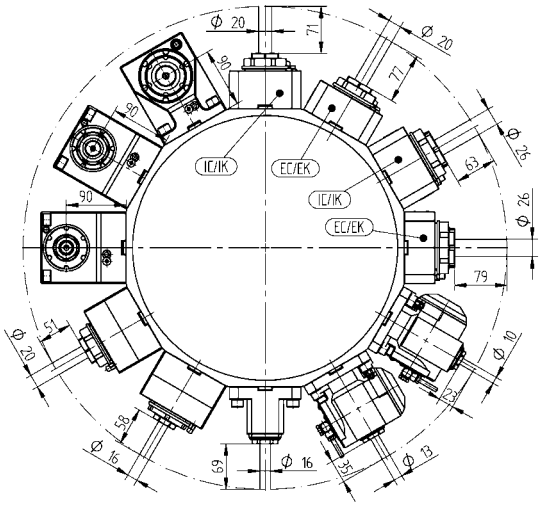

Driven Toolholders - QuickFlex®

OD drill/milling unit (6000 RPM, Heavy Duty)

ER-32 QF	420132010-60 T32206, T32249 0067732000	1:1	EC
ER-32 QF	420132011-60 T32232, T32478 0067732000	1:1	IC 80 bar
ER-40 QF	420140010-60 T32213 0067740000	1:1	EC
ER-40 QF	420140011-60 T32234 0067740000	1:1	IC 80 bar

Face drill/milling unit (6000 RPM, Heavy Duty)

ER-32 QF	420532010-60 T32207, T32256 0067732000	1:1	EC
ER-32 QF	420532011-60 T32233 0067732000	1:1	IC 80 bar
ER-40 QF	420540012-60 T32214 0067740000	1:1	EC
ER-40 QF	420540013-60 T32235 0067740000	1:1	IC 80 bar

Face drill/milling unit, both sides (6000 RPM, Heavy Duty)

ER-32 QF	420532019-60 T32216 0067732000	1:1	EC
ER-40 QF	420540016-60 T32248 0067740000	1:1	EC

Driven Toolholders - Enhanced Program

OD milling unit with combination mill arbor DIN 6358

Ø 16	410216000-60 00675000854	1:1	EC
Ø 22	410222007-60 T32268 00675000483	1:1	EC
Ø 27	410227008-60 00675000245	1:1	EC
Ø 3/4"	410219000-60 00675000483	1:1	EC
Ø 1"	410225000-60 T32217 00675000483	1:1	EC

OD drill/milling unit, offset

ER-32 QF	420132019-60 0067732000	1:1	EC
ER-32 QF	420132020-60 0067732000	1:1	IC 80 bar
ER-25 QF	420125010-60 0067725001	1:2	EC
ER-25 QF	420125011-60 0067725001	1:2	IC 80 bar
ER-32 QF	420132021-60 0067732000	2:1	EC
ER-32 QF	420132022-60 0067732000	2:1	IC 80 bar

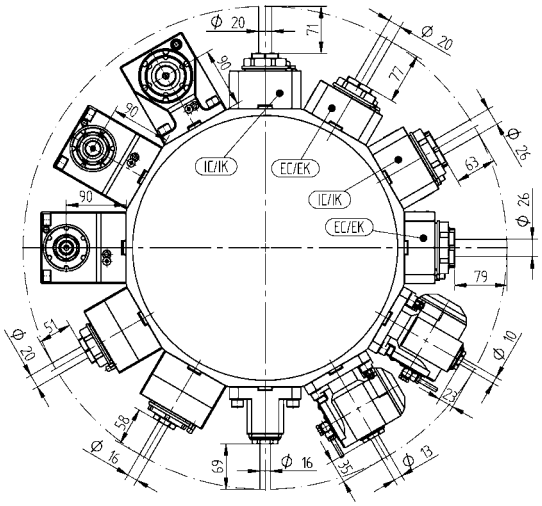

Driven Toolholders - Enhanced Program

Face drill/milling unit

ER-25 QF	420525010-60 0067725001	1:2	EC
ER-25 QF	420525011-60 0067725001	1:2	IC 80 bar
ER-40 QF	420540014-60 0067740000	2:1	EC
ER-40 QF	420540015-60 0067740000	2:1	IC 80 bar

Face milling unit with combination mill arbor DIN 6358

Ø 22	410622000-60 T32269 00675000483	2:1	EC
Ø 27	410627000-60 00675000245	2:1	EC
Ø 1"	410625000-60 T32226 00675000483	2:1	EC

Adjustable angle drill/milling unit

ER 20	411013009-60 T32474 00675000928	1:1	EC
ER 20	411013010-60 00675000928	1:1	IC 80 bar
ER 16	411010001-60 00675000936	1:2	EC
ER 16	411010002-60 00675000936	1:2	IC 80 bar

OD drill/milling unit, both sides

ER 25	413002001-60 00675000907	1:1	EC

© WTO GmbH * Subject to change without notice * www.wto.de

Standard reduction sleeves - cylindrical

Reduction sleeve Ø 20

240020006	ø 6
240020008	ø 8
240020010	ø 10
240020012	ø 12
240020014	ø 14
240020016	ø 16

Reduction sleeve Ø 25

240025006	ø 6
240025008	ø 8
240025010	ø 10
240025012	ø 12
240025016	ø 16
240025020	ø 20

Reduction sleeve Ø 32

240032006	ø 6
240032008	ø 8
240032010	ø 10
240032012	ø 12
240032016	ø 16
240032020	ø 20
240032025	ø 25

Reduction sleeve Ø 40

240040006	ø 6
240040008	ø 8
240040010	ø 10
240040012	ø 12
240040014	ø 14
240040016	ø 16
240040020	ø 20
240040025	ø 25
240040032	ø 32

Reduction sleeve Ø 50

240050010	ø 10
240050012	ø 12
240050016	ø 16
240050020	ø 20
240050025	ø 25
240050032	ø 32
240050040	ø 40

Reduction sleeve Ø 3/4"

2400075025	ø 1/4"
2400075032	ø 5/16"
2400075038	ø 3/8"
2400075050	ø 1/2"
2400075063	ø 5/8"

Standard reduction sleeves - cylindrical

Reduction sleeve Ø 1"

2400100025	ø 1/4"
2400100031	ø 5/16"
2400100038	ø 3/8"
2400100050	ø 1/2"
2400100063	ø 5/8"
2400100075	ø 3/4"

Reduction sleeve Ø 1 1/4"

2400125038	ø 3/8"
2400125050	ø 1/2"
2400125063	ø 5/8"
2400125075	ø 3/4"
2400125088	ø 7/8"
2400125100	ø 1"

Reduction sleeve Ø 1 1/2"

2400150038	ø 3/8"
2400150050	ø 1/2"
2400150063	ø 5/8"
2400150075	ø 3/4"
2400150088	ø 7/8"
2400150100	ø 1"
2400150125	ø 1 1/4"

Reduction sleeve Ø 2"

2400200050	ø 1/2"
2400200063	ø 5/8"
2400200088	ø 7/8"
2400200100	ø 1"
2400200125	ø 1 1/4"
2400200150	ø 1 1/2"
2400200175	ø 1 3/4"

Standard reduction sleeves - cylindrical, with slot

Reduction sleeve Ø 32

240132008	ø 8
240132010	ø 10
240132012	ø 12
240132015	ø 15
240132016	ø 16
240132020	ø 20
240132025	ø 25

Reduction sleeve Ø 40

240140010	ø 10
240140012	ø 12
240140015	ø 15
240140016	ø 16
240140020	ø 20
240140025	ø 25
240140032	ø 32

Standard reduction sleeves - morse taper

Reduction sleeve Ø 32

240532001	MT 1
240532002	MT 2
240532003	MT 3

Reduction sleeve Ø 40

240540001	MT 1
240540002	MT 2
240540003	MT 3
240540004	MT 4

© WTO GmbH * Subject to change without notice * www.wto.de

Reduction sleeves for boring bar holders - cylindrical

Reduction sleeve Ø 25

24-T20180	ø 8
24-T20182	ø 10
24-T20184	ø 12
24-T20186	ø 16
24-T20188	ø 20

Reduction sleeve Ø 32

24-T20112	ø 8
24-T20114	ø 10
24-T20116	ø 12
24-T20118	ø 16
24-T20120	ø 20
24-T20122	ø 25

Reduction sleeve Ø 40

24-T20086	ø 8
24-T20088	ø 10
24-T20090	ø 12
24-T20092	ø 16
24-T20094	ø 20
24-T20096	ø 25
24-T20098	ø 32

Reduction sleeve Ø 50

24-T20160	ø 10
24-T20162	ø 12
24-T20164	ø 16
24-T20166	ø 20
24-T20168	ø 25
24-T20170	ø 32
24-T20172	ø 40

Reduction sleeve Ø 60

24-T20136	ø 32
24-T20138	ø 40
24-T20140	ø 50

Reduction sleeve Ø 1"

24-T20181	ø 3/8"
24-T20183	ø 1/2"
24-T20185	ø 5/8"
24-T20187	ø 3/4"

Reduction sleeve Ø 1 1/4"

24-T20115	ø 3/8"
24-T20117	ø 1/2"
24-T20119	ø 5/8"
24-T20121	ø 3/4"
24-T20123	ø 1"

Reduction sleeves for boring bar holders - cylindrical

Reduction sleeve Ø 1 1/2"

24-T20089	ø 3/8"
24-T20091	ø 1/2"
24-T20093	ø 5/8"
24-T20095	ø 3/4"
24-T20097	ø 1"
24-T20099	ø 1 1/4"

Reduction sleeve Ø 2"

24-T20163	ø 1/2"
24-T20165	ø 5/8"
24-T20167	ø 3/4"
24-T20169	ø 1"
24-T20171	ø 1 1/4"
24-T20173	ø 1 1/2"

Reduction sleeves for boring bar holders - cylindrical, extended

Reduction sleeve Ø 32

24-T20124	ø 8
24-T20126	ø 10
24-T20128	ø 12
24-T20130	ø 16

Reduction sleeve Ø 40

24-T20106	ø 8
24-T20108	ø 10
24-T20110	ø 12
24-T20194	ø 16
24-T20196	ø 20
24-T20216	ø 25

Reduction sleeve Ø 1 1/4"

24-T20127	ø 3/8"
24-T20129	ø 1/2"
24-T20131	ø 5/8"

Reduction sleeve Ø 1 1/2"

24-T20109	ø 3/8"
24-T20111	ø 1/2"
24-T20195	ø 5/8"
24-T20197	ø 3/4"

Reduction sleeves for boring bar holders - morse taper

Reduction sleeve Ø 40

24-T22046	MT 2
24-T22042	MT 3

Reduction sleeve Ø 50

24-T22044	MT 4

© WTO GmbH * Subject to change without notice * www.wto.de

Collets DIN 6499B (ER/ESX)

ER 11	mm	inch
190011000	ø 7-0.5	ø 0.276-0.020
190011010	ø 1-0.5	ø 0.039-0.020
190011015	ø 1.5-1	ø 0.059-0.039
190011020	ø 2-1.5	ø 0.079-0.059
190011025	ø 2.5-2	ø 0.098-0.079
190011030	ø 3-2.5	ø 0.118-0.098
190011035	ø 3.5-3	ø 0.138-0.118
190011040	ø 4-3.5	ø 0.158-0.138
190011045	ø 4.5-4	ø 0.177-0.158
190011050	ø 5-4.5	ø 0.197-0.177
190011055	ø 5.5-5	ø 0.217-0.197
190011060	ø 6-5.5	ø 0.236-0.217
190011065	ø 6.5-6	ø 0.256-0.236
190011070	ø 7-6.5	ø 0.276-0.256

ER 16	mm	inch
190016000	ø 10-0.5	ø 0.394-0.020
190016010	ø 1-0.5	ø 0.039-0.020
190016020	ø 2-1	ø 0.079-0.039
190016030	ø 3-2	ø 0.118-0.079
190016040	ø 4-3	ø 0.158-0.118
190016050	ø 5-4	ø 0.197-0.158
190016060	ø 6-5	ø 0.236-0.197
190016070	ø 7-6	ø 0.276-0.236
190016080	ø 8-7	ø 0.315-0.276
190016090	ø 9-8	ø 0.354-0.315
190016100	ø 10-9	ø 0.394-0.354

ER 20	mm	inch
190020000	ø 13-1	ø 0.512-0.039
190020010	ø 1-0.5	ø 0.039-0.020
190020020	ø 2-1	ø 0.079-0.039
190020030	ø 3-2	ø 0.118-0.079
190020040	ø 4-3	ø 0.157-0.118
190020050	ø 5-4	ø 0.197-0.157
190020060	ø 6-5	ø 0.236-0.197
190020070	ø 7-6	ø 0.276-0.236
190020080	ø 8-7	ø 0.315-0.276
190020090	ø 9-8	ø 0.354-0.315
190020100	ø 10-9	ø 0.394-0.354
190020110	ø 11-10	ø 0.433-0.394
190020120	ø 12-11	ø 0.472-0.433
190020130	ø 13-12	ø 0.512-0.472

Collets DIN 6499B (ER/ESX)

ER 25	mm	inch
190025000	ø 16-1	ø 0.630-0.039
190025020	ø 2-1	ø 0.079-0.039
190025030	ø 3-2	ø 0.118-0.079
190025040	ø 4-3	ø 0.157-0.118
190025050	ø 5-4	ø 0.197-0.157
190025060	ø 6-5	ø 0.236-0.197
190025070	ø 7-6	ø 0.276-0.236
190025080	ø 8-7	ø 0.315-0.276
190025090	ø 9-8	ø 0.354-0.315
190025100	ø 10-9	ø 0.394-0.354
190025110	ø 11-10	ø 0.433-0.394
190025120	ø 12-11	ø 0.472-0.433
190025130	ø 13-12	ø 0.512-0.472
190025140	ø 14-13	ø 0.551-0.512
190025150	ø 15-14	ø 0.591-0.551
190025160	ø 16-15	ø 0.630-0.591

ER 32	mm	inch
190032000	ø 20-2	ø 0.787-0.079
190032030	ø 3-2	ø 0.118-0.079
190032040	ø 4-3	ø 0.157-0.118
190032050	ø 5-4	ø 0.197-0.157
190032060	ø 6-5	ø 0.236-0.197
190032070	ø 7-6	ø 0.276-0.236
190032080	ø 8-7	ø 0.315-0.276
190032090	ø 9-8	ø 0.354-0.315
190032100	ø 10-9	ø 0.394-0.354
190032110	ø 11-10	ø 0.433-0.394
190032120	ø 12-11	ø 0.472-0.433
190032130	ø 13-12	ø 0.512-0.472
190032140	ø 14-13	ø 0.551-0.512
190032150	ø 15-14	ø 0.591-0.551
190032160	ø 16-15	ø 0.630-0.591
190032170	ø 17-16	ø 0.669-0.630
190032180	ø 18-17	ø 0.709-0.669
190032190	ø 19-18	ø 0.748-0.709
190032200	ø 20-19	ø 0.787-0.748

Collets DIN 6499B (ER/ESX)

ER 40	mm	inch
190040000	ø 26-3	ø 1.024-0.118
190040040	ø 4-3	ø 0.157-0.118
190040050	ø 5-4	ø 0.197-0.157
190040060	ø 6-5	ø 0.236-0.197
190040070	ø 7-6	ø 0.276-0.236
190040080	ø 8-7	ø 0.315-0.276
190040090	ø 9-8	ø 0.354-0.315
190040100	ø 10-9	ø 0.394-0.354
190040110	ø 11-10	ø 0.433-0.394
190040120	ø 12-11	ø 0.472-0.433
190040130	ø 13-12	ø 0.512-0.472
190040140	ø 14-13	ø 0.551-0.512
190040150	ø 15-14	ø 0.591-0.551
190040160	ø 16-15	ø 0.630-0.591
190040170	ø 17-16	ø 0.669-0.630
190040180	ø 18-17	ø 0.709-0.669
190040190	ø 19-18	ø 0.748-0.709
190040200	ø 20-19	ø 0.787-0.748
190040210	ø 21-20	ø 0.827-0.787
190040220	ø 22-21	ø 0.866-0.827
190040230	ø 23-22	ø 0.906-0.866
190040240	ø 24-23	ø 0.945-0.906
190040250	ø 25-24	ø 0.984-0.945
190040260	ø 26-25	ø 1.024-0.984

ER 50	mm	inch
190050000	ø 34-10	ø 1.339-0.394
190050060	ø 6-4	ø 0.236-0.157
190050080	ø 8-6	ø 0.315-0.236
190050100	ø 10-8	ø 0.394-0.315
190050120	ø 12-10	ø 0.472-0.394
190050140	ø 14-12	ø 0.551-0.472
190050160	ø 16-14	ø 0.630-0.551
190050180	ø 18-16	ø 0,709-0,630
190050200	ø 20-18	ø 0.787-0.709
190050220	ø 22-20	ø 0.866-0.787
190050240	ø 24-22	ø 0.945-0.866
190050260	ø 26-24	ø 1.024-0.945
190050280	ø 28-26	ø 1.102-1.024
190050300	ø 30-28	ø 1.181-1.102
190050320	ø 32-30	ø 1.260-1.181
190050340	ø 34-32	ø 1.339-1.260

Collets DIN 6499D (ER/ESX) - sealed, for IC

ER 11	mm	inch
191011030	ø 3	
191011040	ø 4	
191011050	ø 5	
191011060	ø 6	
191111013-in		ø 0.125
191111019-in		ø 0.188
191111025-in		ø 0.25

ER 16	mm	inch
191016000	ø 3-10	
191016030	ø 3	
191016040	ø 4	
191016050	ø 5	
191016060	ø 6	
191016070	ø 7	
191016080	ø 8	
191016090	ø 9	
191016100	ø 10	
191116001		ø 0.125-0.375
191116013-in		ø 0.125
191116019-in		ø 0.188
191116025-in		ø 0.25
191116031-in		ø 0.313
191116038-in		ø 0.375

ER 20	mm	inch
191020000	ø 3-12	
191020030	ø 3	
191020040	ø 4	
191020050	ø 5	
191020060	ø 6	
191020070	ø 7	
191020080	ø 8	
191020090	ø 9	
191020100	ø 10	
191020110	ø 11	
191020120	ø 12	
191120001		ø 0.125-0.5
191120013-in		ø 0.125
191120019-in		ø 0.188
191120025-in		ø 0.25
191120031-in		ø 0.313
191120038-in		ø 0.375
191120044-in		ø 0.438
191120050-in		ø 0.5

© WTO GmbH * Subject to change without notice * www.wto.de

Collets DIN 6499D (ER/ESX) - sealed, for IC

ER 25	mm	inch
191025000	ø 4-16	
191025030	ø 3	
191025040	ø 4	
191025050	ø 5	
191025060	ø 6	
191025070	ø 7	
191025080	ø 8	
191025090	ø 9	
191025100	ø 10	
191025110	ø 11	
191025120	ø 12	
191025130	ø 13	
191025140	ø 14	
191025150	ø 15	
191025160	ø 16	
191125001		ø 0.25-0.625
191125025-in		ø 0.25
191125031-in		ø 0.313
191125038-in		ø 0.375
191125044-in		ø 0.438
191125050-in		ø 0.5
191125056-in		ø 0.563
191125063-in		ø 0.625

ER 32	mm	inch
191032000	ø 4-20	
191032030	ø 3	
191032040	ø 4	
191032050	ø 5	
191032060	ø 6	
191032070	ø 7	
191032080	ø 8	
191032090	ø 9	
191032100	ø 10	
191032110	ø 11	
191032120	ø 12	
191032130	ø 13	
191032140	ø 14	
191032150	ø 15	
191032160	ø 16	
191032170	ø 17	
191032180	ø 18	
191032190	ø 19	
191032200	ø 20	
191132001		ø 0.25-0.75
191132025-in		ø 0.25
191132031-in		ø 0.313
191132038-in		ø 0.375
191132044-in		ø 0.438
191132050-in		ø 0.5
191132056-in		ø 0.563
191132063-in		ø 0.625
191132069-in		ø 0.688
191132075-in		ø 0.75

Collets DIN 6499D (ER/ESX) - sealed, for IC

ER 40	mm	inch
191040060	ø 6	
191040080	ø 8	
191040100	ø 10	
191040120	ø 12	
191040140	ø 14	
191040160	ø 16	
191040180	ø 18	
191040200	ø 20	
191040220	ø 22	
191040250	ø 25	
191140025-in		ø 0.25
191140031-in		ø 0.313
191140038-in		ø 0.375
191140044-in		ø 0.438
191140050-in		ø 0.5
191140056-in		ø 0.563
191140063-in		ø 0.625
191140069-in		ø 0.688
191140075-in		ø 0.75
191140088-in		ø 0.875
191140100-in		ø 1

WTO worldwide

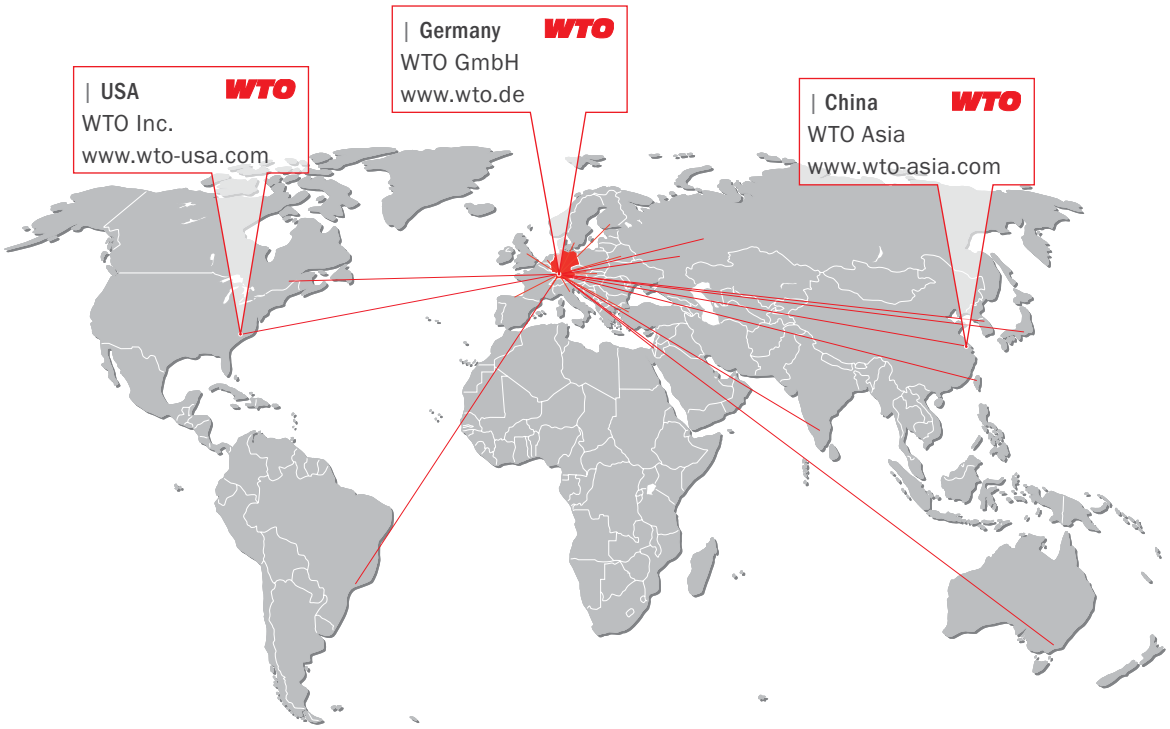

WTO GmbH
Auf der oberen Au 45
77797 Ohlsbach
Germany

WTO USA
13900 S Lakes Dr Ste F
Charlotte NC 28273-7119
USA

WTO Asia
Room 109-110, Building 2
No. 228 Banting Road
Jiuting Town,
Songjiang District
201615 Shanghai
China

Our distribution partners. Competence right there.

| Australia
Dimac Tooling Ltd.
sales@dimac.com.au

| Belarus
LLC "PMI Engineering"
tool@pmi.by

| Brazil
TF2
tfdois@tfdois.com.br

| Canada
Mittmann Industrial Inc.
info@mittmann.com

| China
Shanghai Gangde
wtocando@yahoo.com

| Czech Republic
ALBA precision, spol. s.r.o.
info@albaprecision.cz

| Denmark
Tool-part
cj@tool-part.dk

| Finland
Suomen Terätuonti Oy
myynti@stt.as

| France
Philippe Tagliafero
pta@wto.de

| Great Britain
Cutwel Ltd.
sales@cutwel.net

| India
Ulhas Patil
u.patil@wto-asia.com

| Israel
E.Y.A.R. Ltd.
boris@eyar.co.il

| Italy
Prymark srl
commerciale@prymark.it

| Japan
NK Works Co. Ltd.
k_samba@nk-works.co.jp

| Korea
WTO Office Korea
is.chon@wto-korea.com

| Mexico
Workholding Engineering De México
info@wem.com.mx

| Netherlands
Toologic BeNeLux B.V.
info@toologic-benelux.nl

| Norway
Helge Karlsen Verktøy og Maskin AS
hkvm@hkvm.no

| Poland
ARCO Andrzej Rudenko
info@arcotools.pl

| Romania
SC Elif Trading SRL
bulent.ozkan@eliftrading.com

| Russia
WTO Office Russia
office@wto-russia.com

| Slowakia
ALBA precision s.r.o.
albaprecision@albaprecision.sk

| Spain
ITALMATIC, S.A.
italmatic@italmatic.es

| Sweden
Komet Scandinavia AB
scandinavia@kometgroup.com

| Switzerland
Utilis AG
info@utilis.com

| Taiwan
Kaiko Co., Ltd.
info@kaiko.com.tw

| Turkey
MYK CNC MAKINA SAN. VE
huseyin.tatlidil@mykcnc.com.tr

| Ukraine
„LLC" SPA Stankopromimport
info@phoenix-ua.com

08 I 2019 en