Toolholder Program

GLS-150, 200 M/Y (new turret version)
GLS-1500, 2000 M/LY/LMS/LYS
GLS-2800-3300 M/Y/MS/YS
GMS-2000 ST (15 station turret)
GS-200-280 M/MS, GA-2000-3600 M
GS-400, 600, 6000, 6600, 8000, 8800 M
GS-2000 - 4000 M/Y/MS/YS (12 station turret)
GS-2000 - 3300 M/Y/MS/YS (16 station turret)
GTS-150 MMX/XY (new turret version)
GTS-200, 260 MMX/XY (new turret version)
GTX/GTZ-2000, 2600 M/Y (12 station turret)
GTX/GTZ-2000, 2600 M/Y (16 station turret)
GV-500, 780 M
GV-800, 1000 M

QuickFlex®

The new quick change system for
high performance and precision.

Minimal investment, maximal expandability.

Designed
for
BMT Turrets

Contents

GLS-150, 200 M/Y (new turret version)	Page	4 - 5
GLS-1500, 2000 M/LY/LMS/LYS	Page	6 - 7
GLS-2800-3300 M/Y/MS/YS	Page	8 - 11
GMS-2000 ST (15 station turret)	Page	12 - 15
GS-200-280 M/MS, GA-2000-3600 M	Page	16 - 19
GS-400, 600, 6000, 6600, 8000, 8800 M	Page	20 - 20
GS-2000 - 4000 M/Y/MS/YS (12 station turret)	Page	21 - 23
GS-2000 - 3300 M/Y/MS/YS (16 station turret)	Page	24 - 27
GTS-150 MMX/XY (new turret version)	Page	28 - 29
GTS-200, 260 MMX/XY (new turret version)	Page	30 - 31
GTX/GTZ-2000, 2600 M/Y (12 station turret)	Page	32 - 35
GTX/GTZ-2000, 2600 M/Y (16 station turret)	Page	36 - 38
GV-500, 780 M	Page	39 - 39
GV-800, 1000 M	Page	40 - 40
Reduction sleeves	Page	41 - 44
Collets	Page	45 - 47

EC = External coolant supply
HP-IC = High pressure internal coolant supply through cutting tool
IC 80 bar = Internal and external coolant supply
Max. coolant pressure = 80 bar
IC 30 bar = Internal and external coolant supply
Max. coolant pressure = 30 bar
Only use filtered coolant fluid (max. particle size = 50 µm)
Do not run without coolant
Do not use for machining abrasive materials such as cast iron, etc.

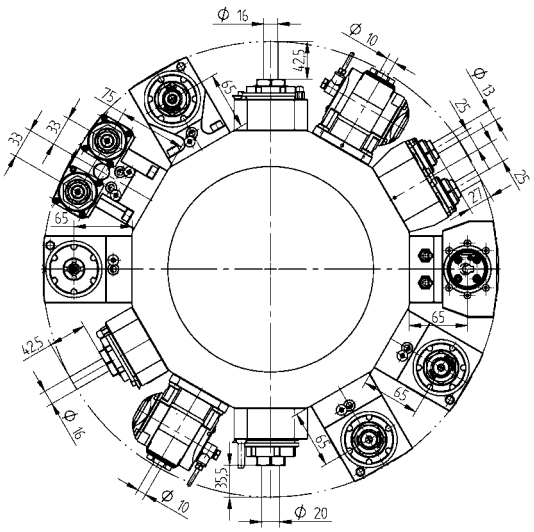

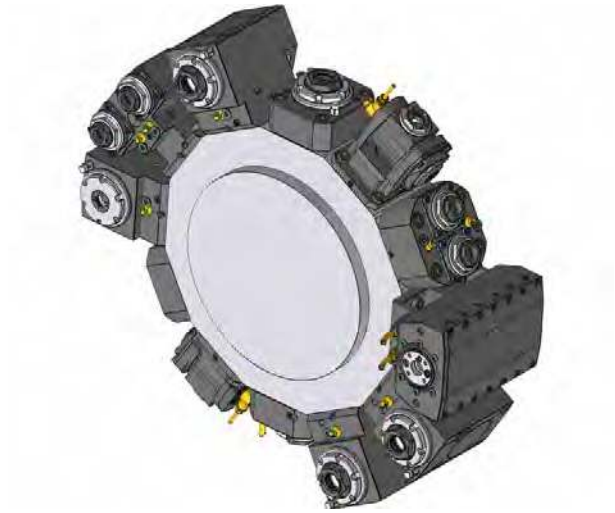

Driven Toolholders - QuickFlex®

Straight drill/milling unit

ER-25 QF	420125010-45	1:1	EC
	0067725000		
ER-25 QF	420125011-45	1:1	IC 80 bar
	0067725000		

Right angle drill/milling unit

ER-25 QF	420525010-45	1:1	EC
	0067725000		
ER-25 QF	420525011-45	1:1	IC 80 bar
	0067725000		

Driven Toolholders - Enhanced Program

Straight drill/milling unit

ER 32	410120002-45	1:1	EC
	0067525000		
ER 32	410120003-45	1:1	IC 80 bar
	0067525000		

Straight offset drill/milling unit

ER 25	410116006-45	1:1	EC
	00675000932		
ER 25	410116007-45	1:1	IC 80 bar
	00675000932		
ER 20	410113002-45	1:2	EC
	00675000939		
ER 20	410113003-45	1:2	IC 80 bar
	00675000939		
ER 16	410110000-45	1:3	EC
	00675000937		
ER 16	410110001-45	1:3	IC 80 bar
	00675000937		
ER 25	410116008-45	1.5:1	EC
	00675000932		
ER 25	410116009-45	1.5:1	IC 80 bar
	00675000932		

© WTO GmbH * Subject to change without notice * www.wto.de

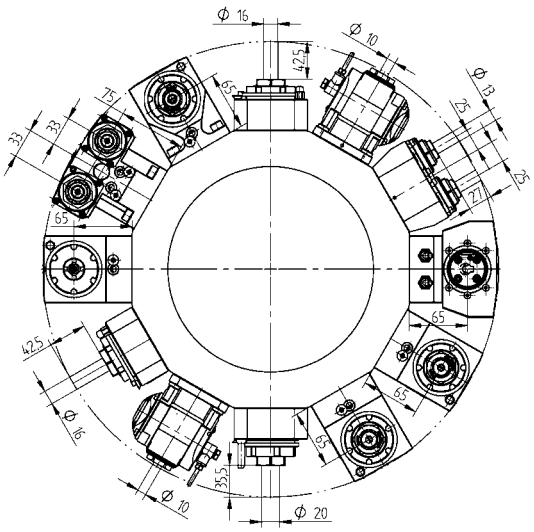

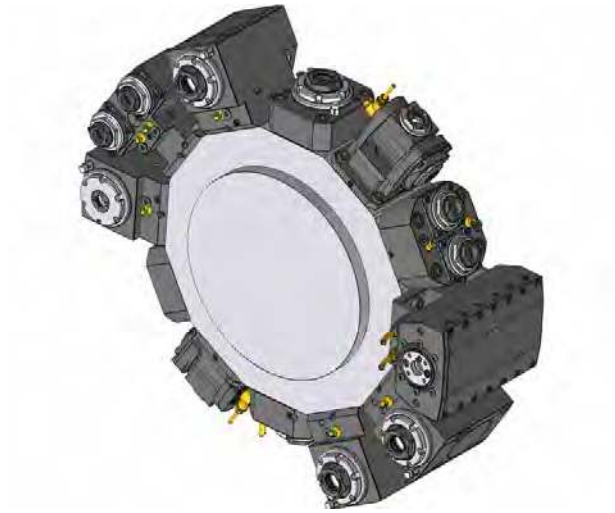

Driven Toolholders - Enhanced Program

Right angle drill/milling unit

ER 32	410520010-45	1:1	EC
	0067725000		
ER 32	410520007-45	1:1	IC 80 bar
	0067725000		
ER-20 QF	420520010-45	1:2	EC
	0067720001		
ER-20 QF	420520011-45	1:2	IC 80 bar
	0067720001		
ER 16	410810002-45	1:3	EC
	00675000841		
ER 16	410810003-45	1:3	IC 80 bar
	00675000841		
ER-25 QF	420525013-45	2:1	EC
	0067725000		
ER-25 QF	420525014-45	2:1	IC 80 bar
	0067725000		
ER 32	410520008-45	2:1	EC
	00675000827		
ER 32	410520009-45	2:1	IC 80 bar
	00675000827		

Adjustable angle drill/milling unit

ER 16	411010000-45	1:1	EC
	00675000902		
ER 16	411010001-45	1:1	IC 80 bar
	00675000902		
ER 11	411007000-45	1:2	EC
	00675000914		
ER 11	411007001-45	1:2	IC 80 bar
	00675000914		

Driven Toolholders - Enhanced Program

Slitting saw unit

Type 14-2	411500001-45	2.73:1	EC
	00675000489		
	160016142 Ø 16		
	160022142 Ø 22		
	160027142 Ø 27		
	160015142 Ø 5/8"		
	160019142 Ø 3/4"		
	160023142 Ø 7/8"		
	160025142 Ø 1"		

Straight drill/milling unit, double, Y axis

ER 20	413002007-45	1:1	EC
	00675001016		

2-spindle - Face drill/milling unit, Y axis

ER 20	413502000-45	1:1	EC
	00675001016		

Broaching unit for ID and OD

TN765050	414532001-45	1:1	EC

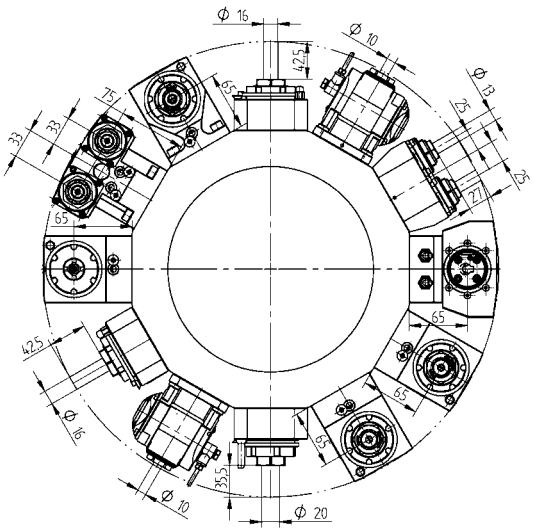

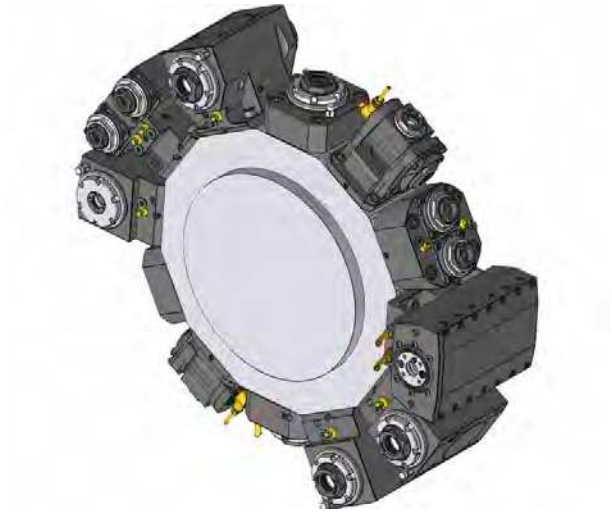

Driven Toolholders - QuickFlex®

Straight drill/milling unit

ER-25 QF	420125010-45	1:1	EC
	0067725000		
ER-25 QF	420125011-45	1:1	IC 80 bar
	0067725000		

Right angle drill/milling unit

ER-25 QF	420525010-45	1:1	EC
	0067725000		
ER-25 QF	420525011-45	1:1	IC 80 bar
	0067725000		

Right angle drill/milling unit, both sides

ER-25 QF	420525012-45	1:1	EC
	0067725000		

Driven Toolholders - Enhanced Program

Straight drill/milling unit

ER 32	410120002-45	1:1	EC
	0067525000		
ER 32	410120003-45	1:1	IC 80 bar
	0067525000		

Straight offset drill/milling unit

ER 25	410116006-45	1:1	EC
	00675000932		
ER 25	410116007-45	1:1	IC 80 bar
	00675000932		
ER 20	410113002-45	1:2	EC
	00675000939		
ER 20	410113003-45	1:2	IC 80 bar
	00675000939		
ER 16	410110000-45	1:3	EC
	00675000937		
ER 16	410110001-45	1:3	IC 80 bar
	00675000937		
ER 25	410116008-45	1.5:1	EC
	00675000932		
ER 25	410116009-45	1.5:1	IC 80 bar
	00675000932		

© WTO GmbH * Subject to change without notice * www.wto.de

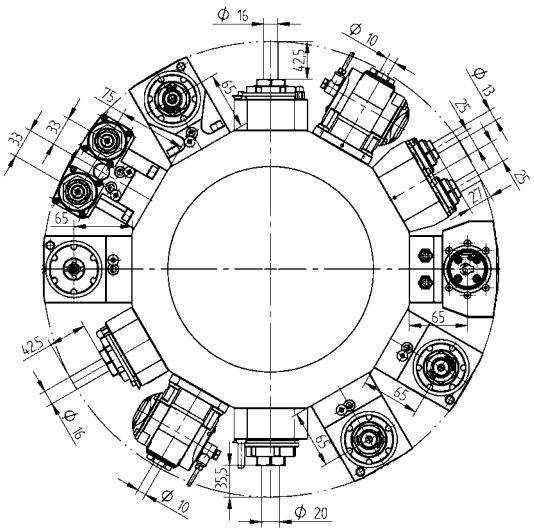

Driven Toolholders - Enhanced Program

Right angle drill/milling unit

ER 32	410520010-45	1:1	EC
	0067725000		
ER 32	410520007-45	1:1	IC 80 bar
	0067725000		
ER-20 QF	420520010-45	1:2	EC
	0067720001		
ER-20 QF	420520011-45	1:2	IC 80 bar
	0067720001		
ER 16	410810002-45	1:3	EC
	00675000841		
ER 16	410810003-45	1:3	IC 80 bar
	00675000841		
ER-25 QF	420525013-45	2:1	EC
	0067725000		
ER-25 QF	420525014-45	2:1	IC 80 bar
	0067725000		
ER 32	410520008-45	2:1	EC
	00675000827		
ER 32	410520009-45	2:1	IC 80 bar
	00675000827		

Adjustable angle drill/milling unit

ER 16	411010000-45	1:1	EC
	00675000902		
ER 16	411010001-45	1:1	IC 80 bar
	00675000902		
ER 11	411007000-45	1:2	EC
	00675000914		
ER 11	411007001-45	1:2	IC 80 bar
	00675000914		

Driven Toolholders - Enhanced Program

Slitting saw unit

Type 14-2	411500001-45	2.73:1	EC
	00675000489		
	160016142 Ø 16		
	160022142 Ø 22		
	160027142 Ø 27		
	160015142 Ø 5/8"		
	160019142 Ø 3/4"		
	160023142 Ø 7/8"		
	160025142 Ø 1"		

Straight drill/milling unit, double, Y axis

ER 20	413002007-45	1:1	EC
	00675001016		

2-spindle - Face drill/milling unit, Y axis

ER 20	413502000-45	1:1	EC
	00675001016		

Broaching unit for ID and OD

TN765050	414532001-45	1:1	EC

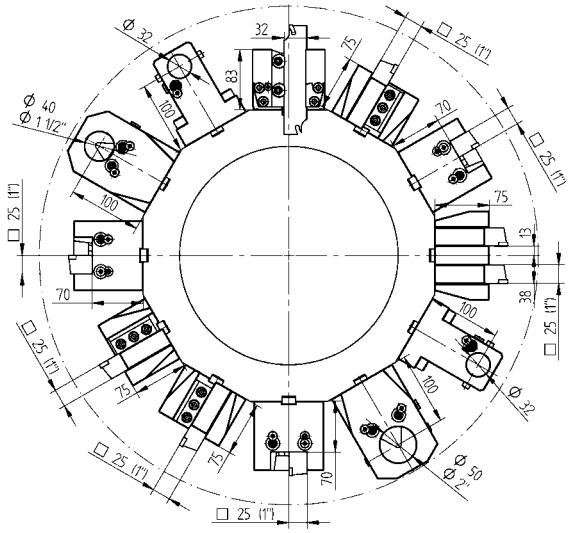

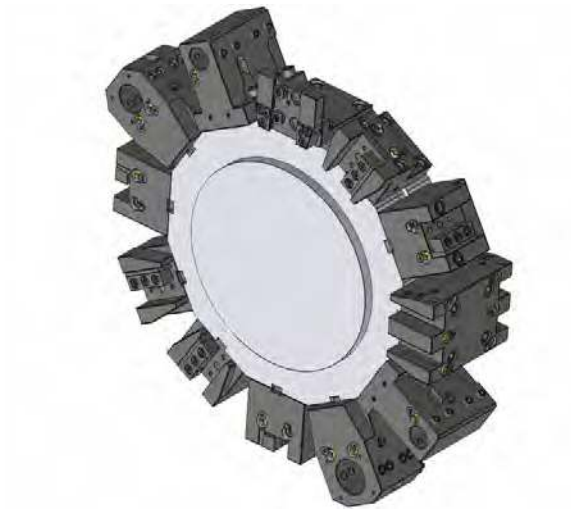

Static Toolholders - Standard Program

OD cutting holder

25	48-92428	
1"	48-92466	

OD cutting holder, HP-IC

25	48-92428-HP	IC 80 bar
1"	48-92466-HP	IC 80 bar

OD cutting holder, both sides

25	48-92438
1"	48-92472

OD cutting holder, both sides, HP-IC

25	48-92438-HP	IC 80 bar
1"	48-92472-HP	IC 80 bar

Face cutting holder

25	48-86719
1"	48-86720

Face cutting holder, HP-IC

25	48-109249-HP	IC 80 bar
1"	48-109250-HP	IC 80 bar

Combination toolholder, LF=100

Ø 40	48-92397	IC 80 bar
	241140020 ER32	
	241140026 ER40	
Ø 50	48-92467	IC 80 bar
Ø 1 1/2"	48-92468	IC 80 bar
	2411150020 ER32	
Ø 2"	48-92469	IC 80 bar

Static Toolholders - Standard Program

Boring bar holder, both sides

Ø 32	48-101033

Cover plate

48-87089

© WTO GmbH * Subject to change without notice * www.wto.de

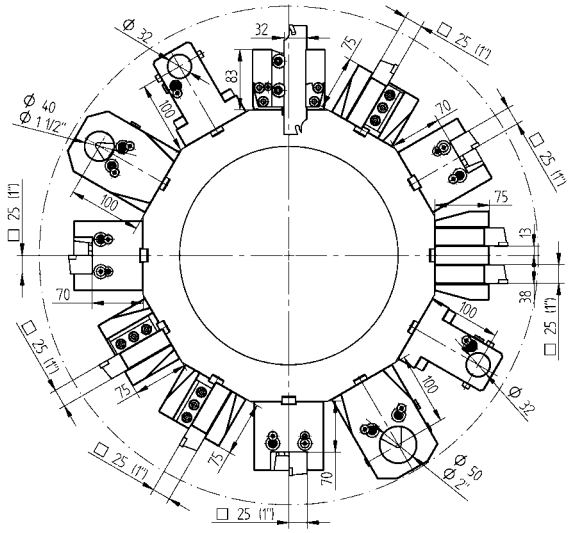

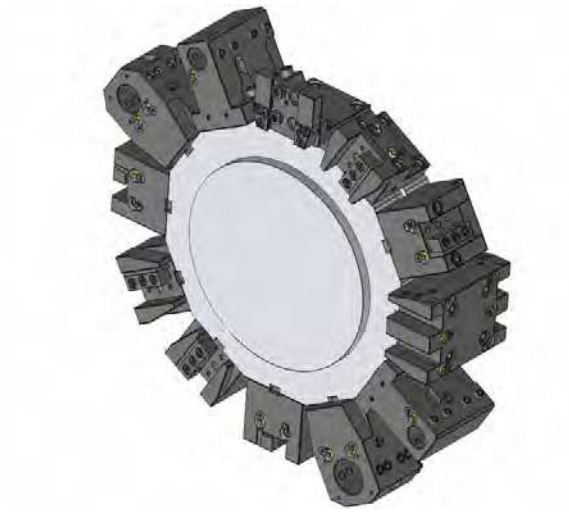

Static Toolholders - Enhanced Program

OD cutting holder, double, Y axis

25(1")	48-86103

OD cutting holder, both sides, double, Y axis

25(1")	48-86150

Cut-off holder, adjustable

SH 32	48-99060

Cut-off holder, adjustable, HP-IC

SH 32	48-102256R	IC 80 bar
SH 32	48-102256L	IC 80 bar

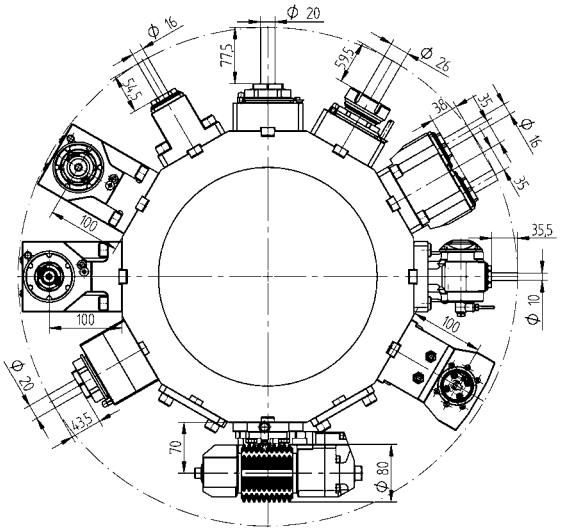

Driven Toolholders - QuickFlex®

Straight drill/milling unit

ER-32 QF	420132015-65	1:1	EC
	0067732000		
ER-32 QF	420132016-65	1:1	IC 80 bar
	0067732000		

Right angle drill/milling unit, LF=100

ER-32 QF	420532018-65	1:1	EC
	0067732000		
ER-32 QF	420532019-65	1:1	IC 80 bar
	0067732000		

Right angle drill/milling unit, both sides, LF=100

ER-32 QF	420532020-65	1:1	EC
	0067732000		

Driven Toolholders - Enhanced Program

Straight drill/milling unit

ER 40	410126001-65	1:1	EC
	00675000079		

Straight milling unit with combination mill arbor DIN 6358

Ø 22	410222002-65	1:1	EC
	00675000483		
Ø 1"	410225002-65	1:1	EC
	00675000483		

Straight offset drill/milling unit

ER-32 QF	420132037-65	1:1	EC
	0067732000		
ER-32 QF	420132038-65	1:1	IC 80 bar
	0067732000		
ER-25 QF	420125010-65	1:2	EC
	0067725001		
ER-25 QF	420125011-65	1:2	IC 80 bar
	0067725001		

Right angle drill/milling unit, LF=100

ER 40	410526007-65	1:1	EC
	00675000079		
ER 40	410526008-65	1:1	IC 80 bar
	00675000079		

© WTO GmbH * Subject to change without notice * www.wto.de

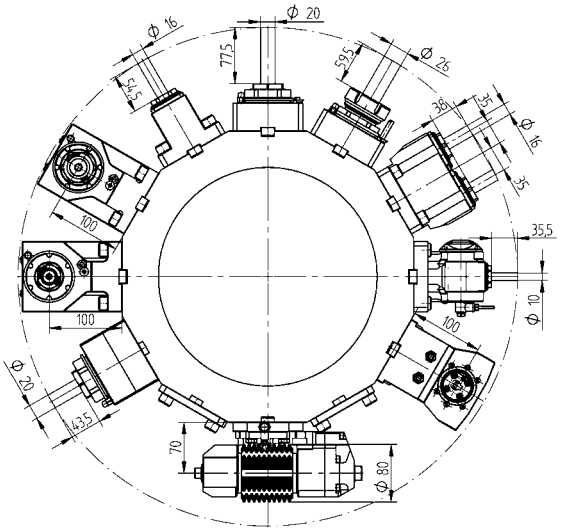

Driven Toolholders - Enhanced Program

Right angle drill/milling unit, LF=100

ER-25 QF	420525012-65	1:2	EC
	0067725001		
ER-25 QF	420525013-65	1:2	IC 80 bar
	0067725001		
ER-32 QF	420532029-65	2:1	EC
	0067732000		
ER-32 QF	420532030-65	2:1	IC 80 bar
	0067732000		

Right angle milling unit with combination mill arbor DIN 6358, LF=100

Ø 22	410622002-65	1:1	EC
	00675000483		
1"	410625002-65	1:1	EC
	00675000483		

Adjustable angle drill/milling unit

ER 16	411010002-65	1:1	EC
	00675000902		
ER 16	411010003-65	1:1	IC 80 bar
	00675000902		
ER 11	411007002-65	1:2	EC
	00675000914		
ER 11	411007003-65	1:2	IC 80 bar
	00675000914		

Driven Toolholders - Enhanced Program

Gear hobbing unit

Type 16-1	411500003-65	1:1	EC
Type 16-1	411500002-65	2:1	EC
	00675000927		
	160016161 Ø 16		
	160022161 Ø 22		
	160027161 Ø 27		
	160015161 Ø 5/8"		
	160019161 Ø 3/4"		
	160025161 Ø 1"		
	96394		

Straight drill/milling unit, both sides

ER 25	413002001-65	1:1	EC
	00675000907		

Straight drill/milling unit, double, Y axis

ER 25	413002004-65	1:1	EC
	00675000907		

Broaching unit for ID and OD

TN765050	414532000-65	1:1	EC

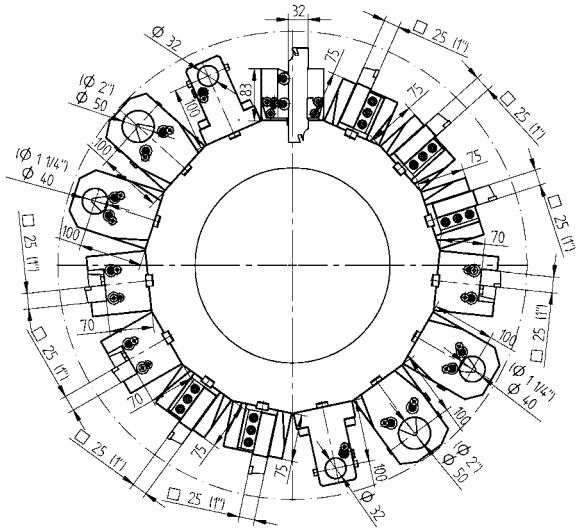

Static Toolholders - Standard Program

OD cutting holder

25	48-92428	
1"	48-92466	

OD cutting holder, HP-IC

25	48-92428-HP	IC 80 bar
1"	48-92466-HP	IC 80 bar

OD cutting holder, both sides

25	48-92438
1"	48-92472

OD cutting holder, both sides, HP-IC

25	48-92438-HP	IC 80 bar
1"	48-92472-HP	IC 80 bar

Face cutting holder

25	48-86719
1"	48-86720

Face cutting holder, HP-IC

25	48-109249-HP	IC 80 bar
1"	48-109250-HP	IC 80 bar

Combination toolholder, LF=100

Ø 40	48-92397	IC 80 bar
	241140020 ER32	
	241140026 ER40	
Ø 50	48-92467	IC 80 bar
Ø 1 1/2"	48-92468	IC 80 bar
	2411150020 ER32	
Ø 2"	48-92469	IC 80 bar

Static Toolholders - Standard Program

Boring bar holder, both sides

Ø 32	48-101033

Cover plate

48-87089

© WTO GmbH * Subject to change without notice * www.wto.de

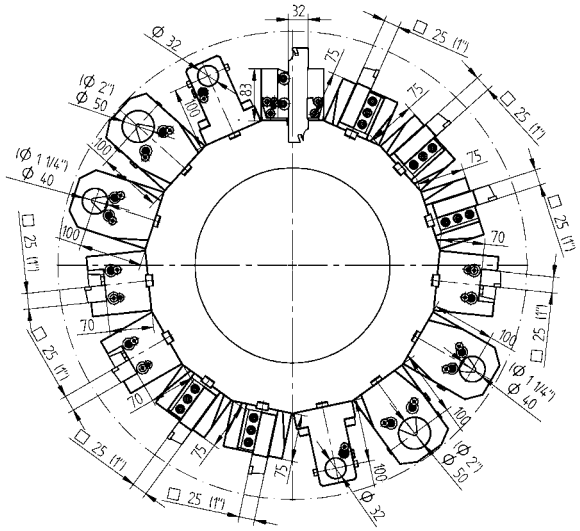

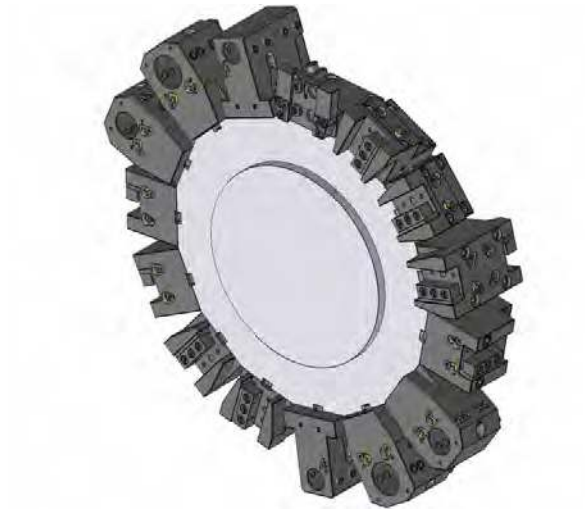

Static Toolholders - Enhanced Program

Cut-off holder, adjustable

SH 32	48-99060	

Cut-off holder, adjustable, HP-IC

SH 32	48-102256R	IC 80 bar
SH 32	48-102256L	IC 80 bar

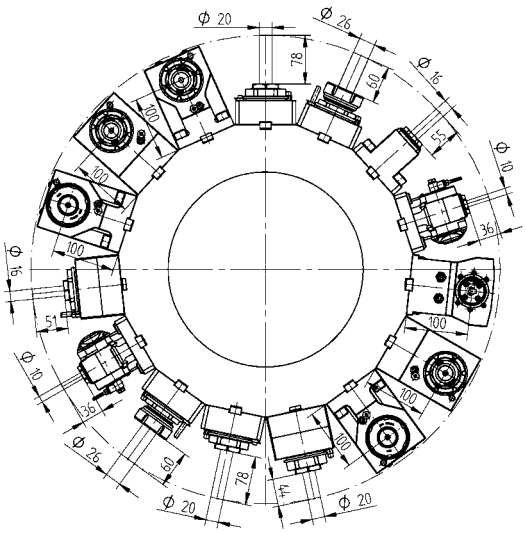

Driven Toolholders - QuickFlex®

Straight drill/milling unit

ER-32 QF	420132015-65	1:1	EC
	0067732000		
ER-32 QF	420132016-65	1:1	IC 80 bar
	0067732000		

Right angle drill/milling unit, LF=100

ER-32 QF	420532018-65	1:1	EC
	0067732000		
ER-32 QF	420532019-65	1:1	IC 80 bar
	0067732000		

Right angle drill/milling unit, both sides, LF=100

ER-32 QF	420532020-65	1:1	EC
	0067732000		

Driven Toolholders - Enhanced Program

Straight drill/milling unit

ER 40	410126001-65	1:1	EC
	00675000079		

Straight milling unit with combination mill arbor DIN 6358

Ø 22	410222002-65	1:1	EC
	00675000483		
Ø 1"	410225002-65	1:1	EC
	00675000483		

Straight offset drill/milling unit

ER-32 QF	420132037-65	1:1	EC
	0067732000		
ER-32 QF	420132038-65	1:1	IC 80 bar
	0067732000		
ER-25 QF	420125010-65	1:2	EC
	0067725001		
ER-25 QF	420125011-65	1:2	IC 80 bar
	0067725001		

Right angle drill/milling unit, LF=100

ER 40	410526007-65	1:1	EC
	00675000079		
ER 40	410526008-65	1:1	IC 80 bar
	00675000079		

© WTO GmbH * Subject to change without notice * www.wto.de

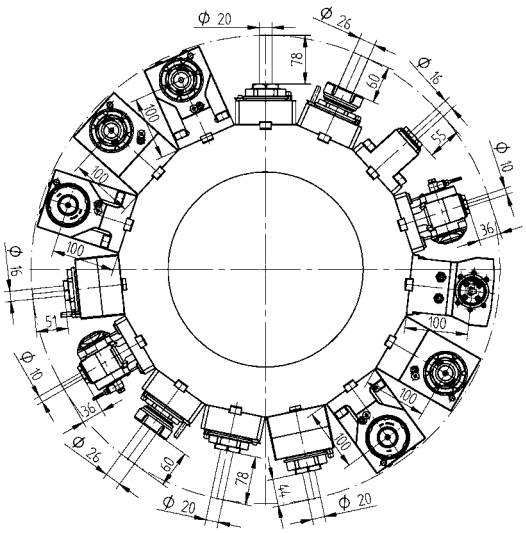

Driven Toolholders - Enhanced Program

Right angle drill/milling unit, LF=100

ER-25 QF	420525012-65	1:2	EC
	0067725001		
ER-25 QF	420525013-65	1:2	IC 80 bar
	0067725001		
ER-32 QF	420532029-65	2:1	EC
	0067732000		
ER-32 QF	420532030-65	2:1	IC 80 bar
	0067732000		

Right angle milling unit with combination mill arbor DIN 6358, LF=100

Ø 22	410622002-65	1:1	EC
	00675000483		
1"	410625002-65	1:1	EC
	00675000483		

Adjustable angle drill/milling unit

ER 16	411010002-65	1:1	EC
	00675000902		
ER 16	411010003-65	1:1	IC 80 bar
	00675000902		
ER 11	411007002-65	1:2	EC
	00675000914		
ER 11	411007003-65	1:2	IC 80 bar
	00675000914		

Straight drill/milling unit, both sides

ER 25	413002001-65	1:1	EC
	00675000907		

Broaching unit for ID and OD

TN765050	414532000-65	1:1	EC

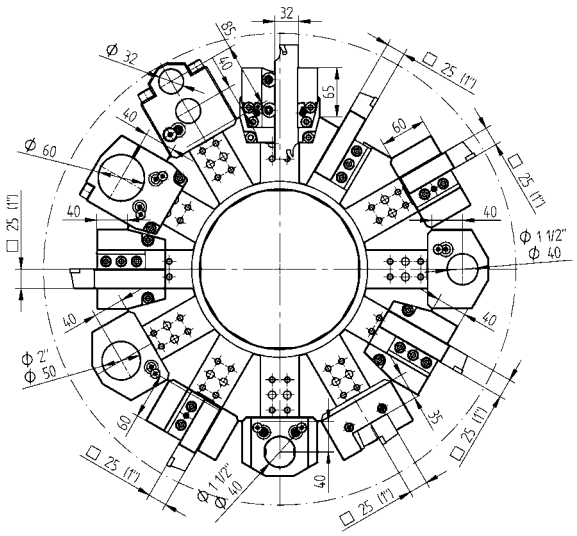

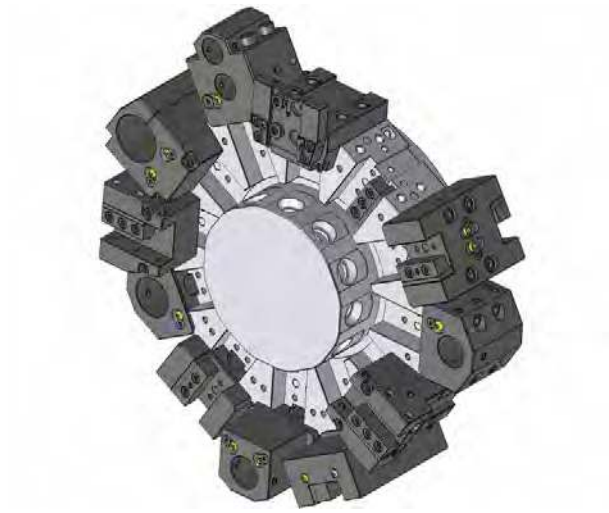

Static Toolholders - Standard Program

Wedge block

25(1")	48-B27036

Wedge shim

25	48-B27037
1"	48-B27038

OD cutting holder, extended

25	48-T00076

OD cutting holder, both sides (only for turret width 85 mm)

25	48-T00158

Face cutting holder, extended

25	48-T00082

Cut-off holder

25	48-T00156

Boring bar holder

Ø 40	48-T10036
Ø 50	48-T10044
Ø 1 1/2"	48-T10037
Ø 2"	48-T10045

Boring bar holder, extended

Ø 1 1/2"	48-T10039

Static Toolholders - Standard Program

Combination toolholder

Ø 40	48-T13064	IC 80 bar
Ø 50	48-83292	IC 80 bar
Ø 1 1/2"	48-T13065	IC 80 bar
Ø 2"	48-83294	IC 80 bar

Combination toolholder, extended

Ø 40	48-T10038	IC 80 bar

Boring bar holder, both sides

Ø 32	48-T10086

© WTO GmbH * Subject to change without notice * www.wto.de

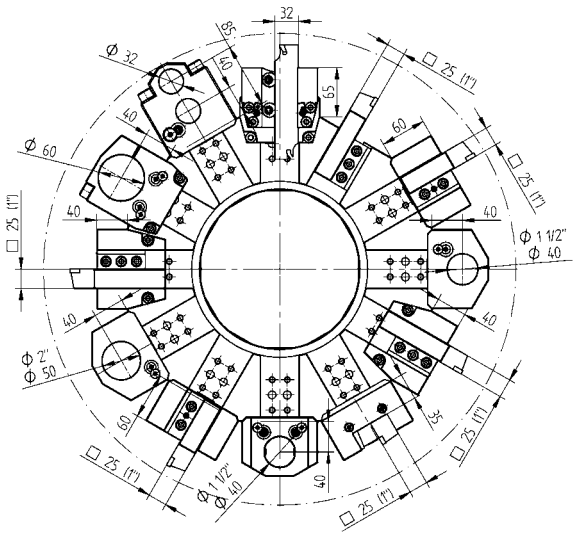

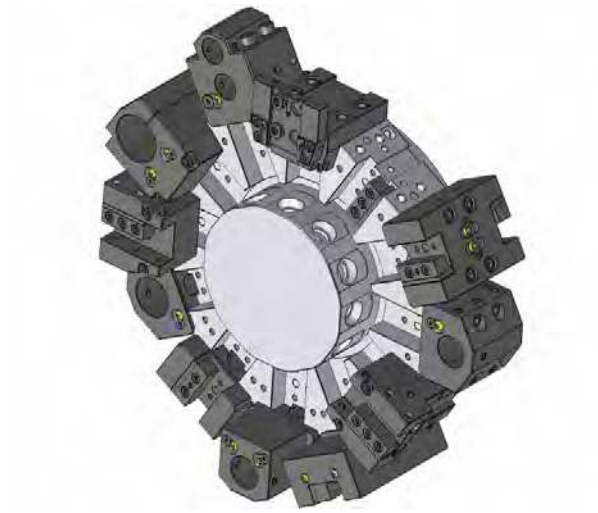

Static Toolholders - Enhanced Program

Work stopper

48-T17002

Cut-off holder, adjustable

SH 32	48-104535

Cut-off holder, adjustable, HP-IC

SH 32	48-104533R 343-810100R67	IC 80 bar
SH 32	48-104533L 343-810100L67	IC 80 bar

Boring bar holder, with slot

Ø 40	48-88503
Ø 50	48-88501
Ø 60	48-85667

Boring bar holder, double

Ø 25	48-83452
Ø 1"	48-83592

VDI adapter, left

VDI 30	48-83473

VDI adapter, right

VDI 30	48-49950

VDI adapter, both sides

VDI 30	48-50896

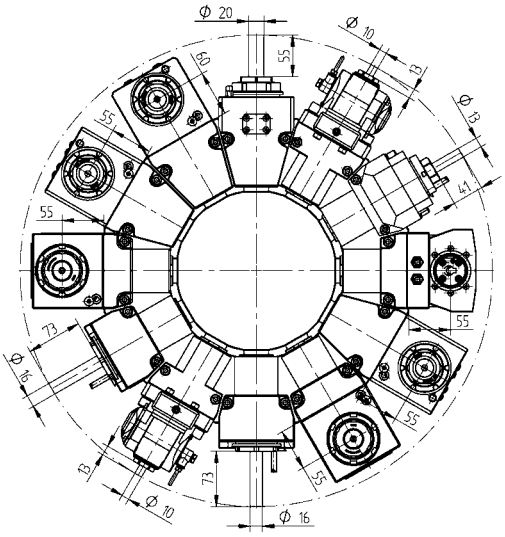

Driven Toolholders - Performance Series

OD drill/milling unit

ER 32	410120000-00 T32115, T32155, T32401 00675000780	1:1	EC
ER 32	410120001-00 T32341 00675000780	1:1	IC 30 bar

Face drill/milling unit

ER 32	410520000-00 T32114, T32154, T32400 00675000780	1:1	EC

Face drill/milling unit, sub spindle

ER 32	410520012-00 T32121, T32366, T32409 00675000780	1:1	EC
ER 32	410520016-00 00675000780	1:1	IC 80 bar

Face drill/milling unit, both sides

ER 32	410520018-00 T32136, T32367, T32410 00675000780	1:1	EC

Driven Toolholders - QuickFlex®

OD drill/milling unit

ER-32 QF	420132010-00 0067732000	1:1	EC
ER-32 QF	420132011-00 0067732000	1:1	IC 80 bar

Face drill/milling unit

ER-32 QF	420532010-00 0067732000	1:1	EC
ER-32 QF	420532011-00 0067732000	1:1	IC 80 bar

Face drill/milling unit, both sides

ER-32 QF	420532014-00 0067732000	1:1	EC

© WTO GmbH * Subject to change without notice * www.wto.de

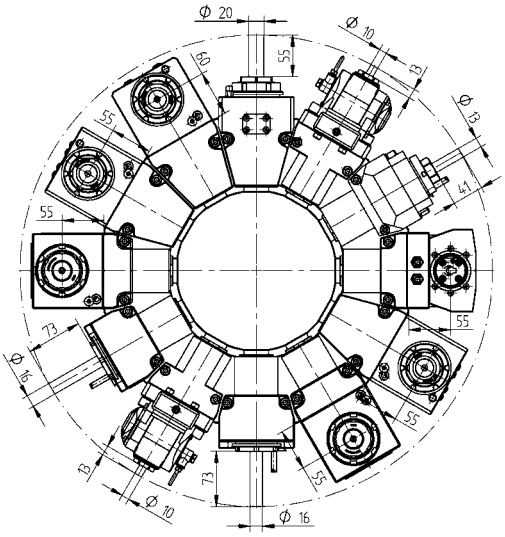

Driven Toolholders - Enhanced Program

OD drill/milling unit

ER 25	410116010-00	1:1	EC
	00675000831		

OD drill/milling unit, offset

ER 20	410113006-00	1:2	EC
	00675000621		
ER 20	410113004-00	1:2	IC 80 bar
	00675000621		

OD drill/milling unit for Weldon or Whistle Notch shank

Ø 16	410116004-00	1:1	EC

OD milling unit

Ø 16	410216002-00	1:1	EC
	00675000854		
Ø 3/4"	410219000-00	1:1	EC
	00675000891		
Ø 22	410222000-00	1:1	EC
	00675000483		

Face drill/milling unit

ER-25 QF	420525010-00	1:2	EC
	0067725001		
ER-25 QF	420525011-00	1:2	IC 80 bar
	0067725001		
ER 32	410520017-00	2:1	EC
	00675000780		

Face drill/milling unit with Weldon or Whistle Notch shank

Ø 25	410525002-00	1:1	EC
Ø 25	410525003-00	1:1	IC 80 bar
Ø 25	410525005-00	2:1	EC

Driven Toolholders - Enhanced Program

Face milling unit with combination mill arbor DIN 6358

Ø 22	410622001-00	1:1	EC
	00675000483		
Ø 27	410627003-00	1:1	EC
	00675000245		
Ø 27	410627002-00	2:1	EC
	00675000245		

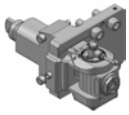

Adjustable angle drill/milling unit

ER 16	411010008-00	1:1	EC
	00675000902		
ER 16	411010007-00	1:1	IC 80 bar
	00675000902		
ER 11	411007004-00	1:2	EC
	00675000914		
ER 11	411007005-00	1:2	IC 80 bar
	00675000914		

Slitting saw unit for interchangeable milling arbor

Type 14-2	411500003-00	2.73:1	EC
	00675000495		
	160016142 Ø 16		
	160022142 Ø 22		
	160027142 Ø 27		
	160015142 Ø 5/8"		
	160019142 Ø 3/4"		
	160023142 Ø 7/8"		
	160025142 Ø 1"		

Broaching unit for ID and OD

TN765050	414532000-00	1:1	EC

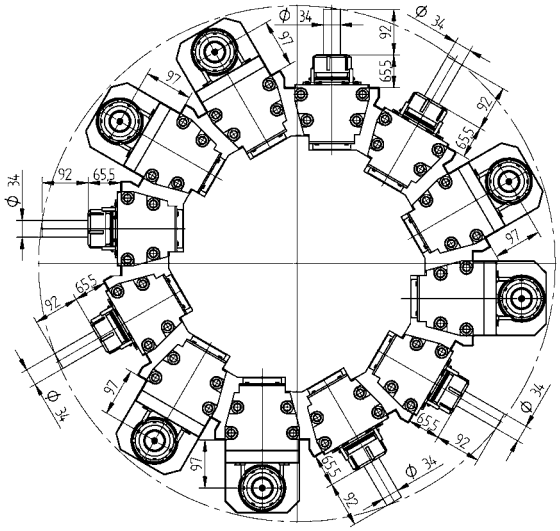

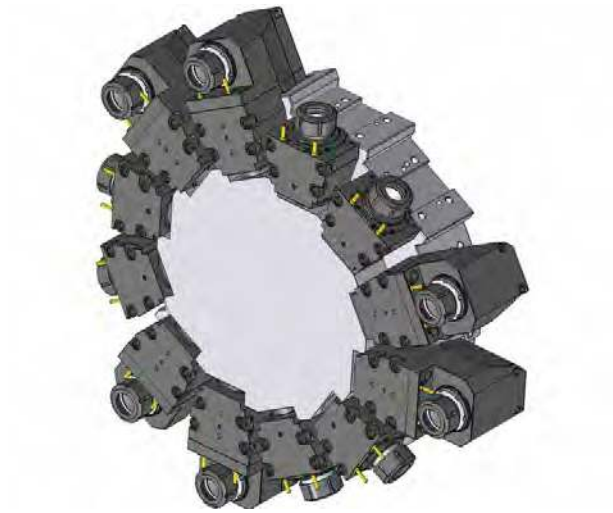

Driven Toolholders - Performance Series

Straight drill/milling unit

ER 50	410134000-00 T32137, T32247 00675000652	1:1	EC
ER 50	410134002-00 00675000652	1:1	IC 80 bar

Right angle drill/milling unit

ER 50	410534002-00 00675000701	1:1	EC
ER 50	410534003-00 00675000701	1:1	IC 80 bar

Driven Toolholders - Enhanced Program

Straight drill/milling unit for system BT 40

BT MAS403	410140000-00	1:1	EC
BT MAS403	410140001-00	1:1	IC 80 bar

Straight drill/milling unit for system ISO/CAT 40

ISO 40	410140004-00 00675000875	1:1	EC
ISO 40	410140005-00 00675000875	1:1	IC 80 bar

© WTO GmbH * Subject to change without notice * www.wto.de

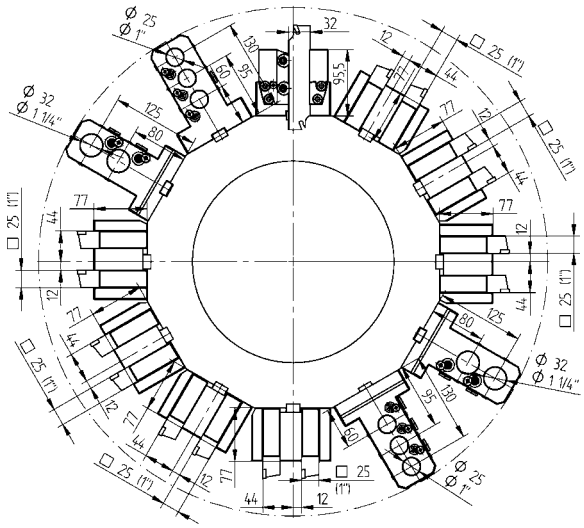

Static Toolholders - Enhanced Program

OD cutting holder, double, Y axis

25(1")	48-85317

OD cutting holder, both sides, double, Y axis

25(1")	48-85318

Cut-off holder, adjustable

SH 32	48-99506

Boring bar holder, triple, universal

Ø 25	48-85319
Ø 1"	48-85320

Boring bar holder, double, both sides

Ø 32	48-85321
Ø 1 1/4"	48-85322

Boring bar holder, triple, both sides

Ø 25	48-85323
Ø 1"	48-85324

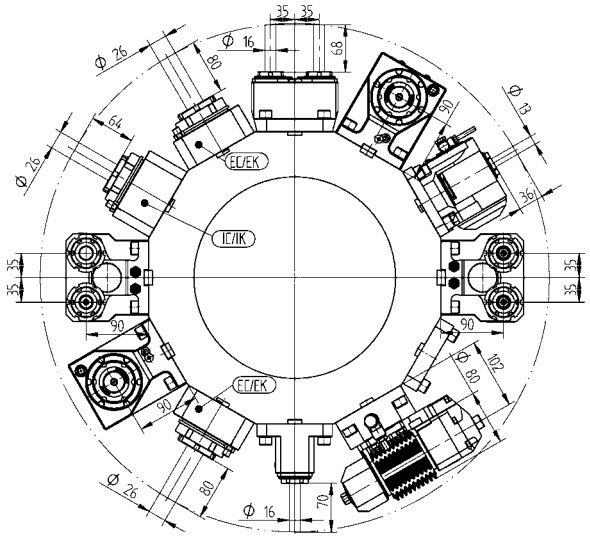

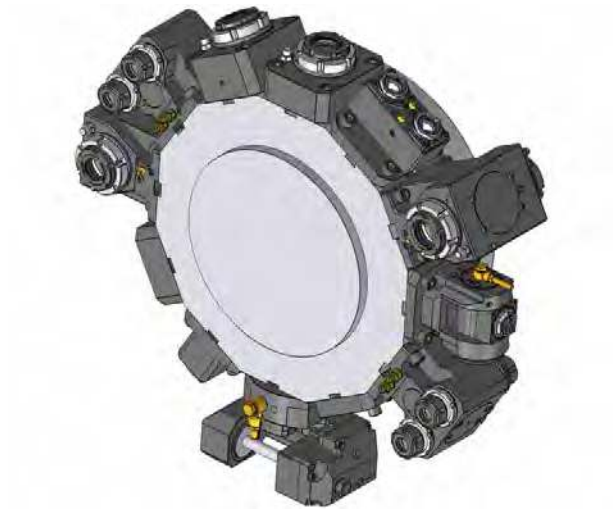

Driven Toolholders - QuickFlex®

OD drill/milling unit

ER-40 QF	420140018-60	1:1	EC
	0067740000		
ER-40 QF	420140019-60	1:1	IC 80 bar
	0067740000		

Face drill/milling unit

ER-40 QF	420540021-60	1:1	EC
	0067740000		
ER-40 QF	420540022-60	1:1	IC 80 bar
	0067740000		

Face drill/milling unit, both sides

ER-40 QF	420540023-60	1:1	EC
	0067740000		

Driven Toolholders - Enhanced Program

OD drill/milling unit for Weldon or Whistle Notch shank

Ø 25	410125010-60	1:1	EC
Ø 25	410125011-60	1:1	IC 80 bar
Ø 1"	410125012-60	1:1	EC
Ø 1"	410125013-60	1:1	IC 80 bar

OD milling unit with combination mill arbor DIN 6358

Ø 22	410222012-60	1:1	EC
	00675000483		
Ø 27	410227010-60	1:1	EC
	00675000245		
Ø 1"	410225001-60	1:1	EC
	00675001010		

OD drill/milling unit, offset

ER-32 QF	420132024-60	1:1	EC
	0067732000		
ER-32 QF	420132025-60	1:1	IC 80 bar
	0067732000		
ER-25 QF	420125012-60	1:2	EC
	0067725001		
ER-25 QF	420125013-60	1:2	IC 80 bar
	0067725001		

Face drill/milling unit

ER 25	410516010-60	1:2	EC
	00675000801		
ER 25	410516011-60	1:2	IC 80 bar
	00675000801		
ER 40	410526034-60	2:1	EC
	00675000781		
ER 40	410526035-60	2:1	IC 80 bar
	00675000781		

© WTO GmbH * Subject to change without notice * www.wto.de

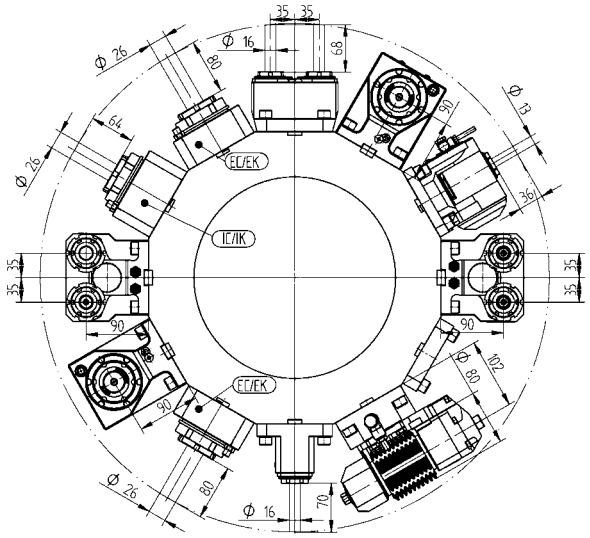

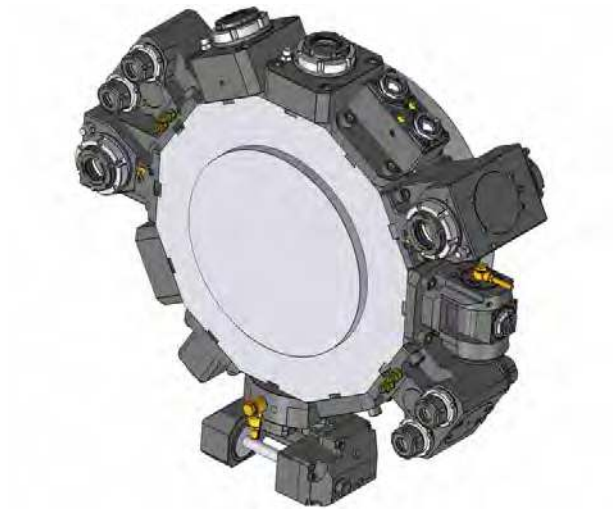

Driven Toolholders - Enhanced Program

Face drill/milling unit with Weldon or Whistle Notch shank

Ø 25	410525015-60	1:1	EC
Ø 25	410525016-60	1:1	IC 80 bar
Ø 1"	410525017-60	1:1	EC
Ø 1"	410525018-60	1:1	IC 80 bar

Face milling unit with combination mill arbor DIN 6358

Ø 22	410622003-60	1:1	EC
	00675000483		
Ø 27	410627002-60	2:1	EC
	00675000245		
Ø 1"	410625001-60	1:1	EC
	00675000483		

Adjustable angle drill/milling unit

ER 20	411013013-60	1:1	EC
	00675000928		
ER 20	411013015-60	1:1	IC 80 bar
	00675000928		
ER 16	411010007-60	1:2	EC
	00675000936		
ER 16	411010008-60	1:2	IC 80 bar
	00675000936		

Slitting saw unit

Type 19-2	411500016-60	3:1	EC
	00675000855		

Driven Toolholders - Enhanced Program

Gear hobbing unit

Type 16-1	411500017-60	1:1	EC
Type 16-1	411500018-60	2:1	EC
	00675000926		
	160016161 Ø 16		
	160022161 Ø 22		
	160027161 Ø 27		
	160015161 Ø 5/8"		
	160019161 Ø 3/4"		
	160025161 Ø 1"		
	96394		

OD drill/milling unit, both sides

ER 25	413002006-60	1:1	EC
	00675000907		

OD drill/milling unit, double, Y axis

ER 25	413002007-60	1:1	EC
	00675000907		

2-spindle - Face drill/milling unit, Y axis

ER 25	413502011-60	1:1	EC
	00675000915		
ER 25	413502012-60	1:1	IC 80 bar
	00675000915		

2-spindle - Face drill/milling unit, both sides, Y axis

ER 25	413502013-60	1:1	EC
	00675000915		

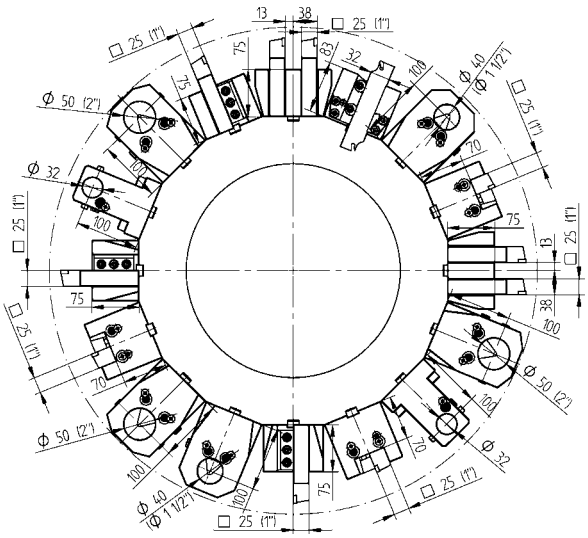

Static Toolholders - Standard Program

OD cutting holder

25	48-92428	
1"	48-92466	

OD cutting holder, HP-IC

25	48-92428-HP	IC 80 bar
1"	48-92466-HP	IC 80 bar

OD cutting holder, both sides

25	48-92438
1"	48-92472

OD cutting holder, both sides, HP-IC

25	48-92438-HP	IC 80 bar
1"	48-92472-HP	IC 80 bar

Face cutting holder

25	48-86719
1"	48-86720

Face cutting holder, HP-IC

25	48-109249-HP	IC 80 bar
1"	48-109250-HP	IC 80 bar

Combination toolholder, LF=100

Ø 40	48-92397	IC 80 bar
	241140020 ER32	
	241140026 ER40	
Ø 50	48-92467	IC 80 bar
Ø 1 1/2"	48-92468	IC 80 bar
	2411150020 ER32	
Ø 2"	48-92469	IC 80 bar

Static Toolholders - Standard Program

Boring bar holder, both sides

Ø 32	48-101033

Cover plate

48-87089

© WTO GmbH * Subject to change without notice * www.wto.de

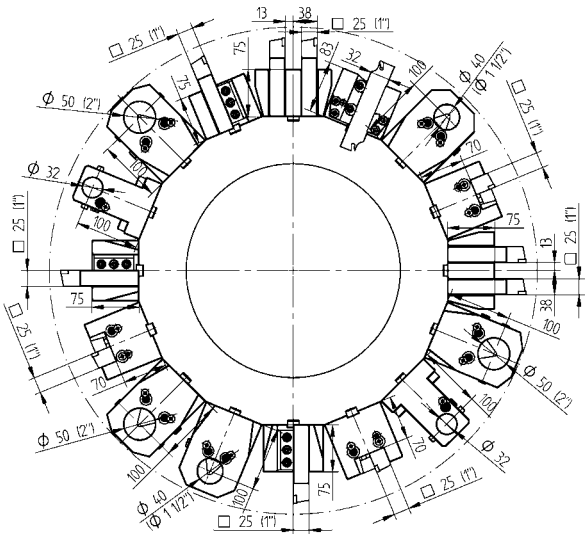

Static Toolholders - Enhanced Program

OD cutting holder, double, Y axis

25(1")	48-86103

OD cutting holder, both sides, double, Y axis

25(1")	48-86150

Cut-off holder, adjustable

SH 32	48-99060

Cut-off holder, adjustable, HP-IC

SH 32	48-102256R	IC 80 bar
SH 32	48-102256L	IC 80 bar

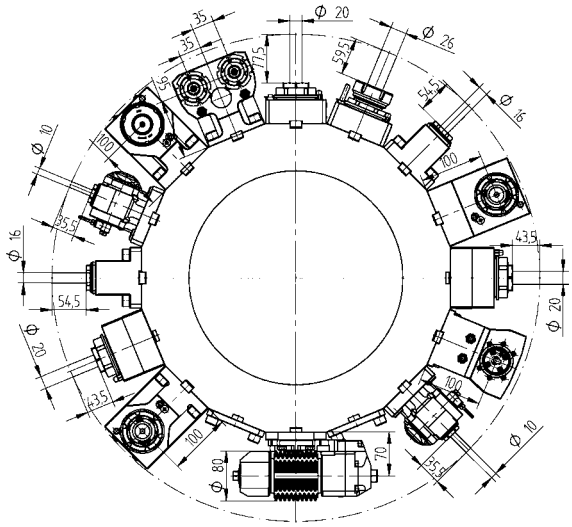

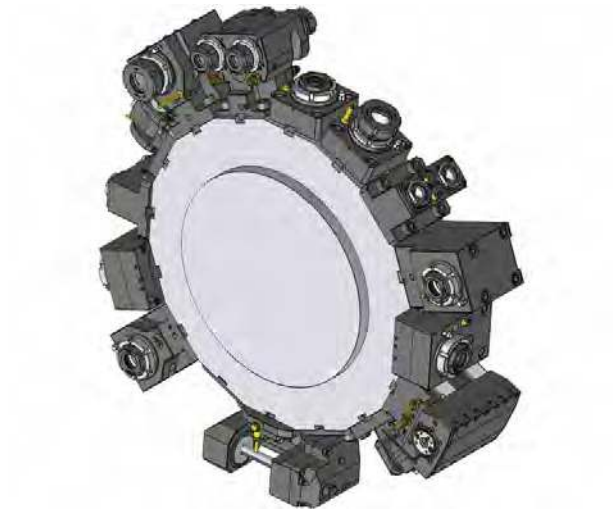

Driven Toolholders - QuickFlex®

Straight drill/milling unit

ER-32 QF	420132015-65	1:1	EC
	0067732000		
ER-32 QF	420132016-65	1:1	IC 80 bar
	0067732000		

Right angle drill/milling unit, LF=100

ER-32 QF	420532018-65	1:1	EC
	0067732000		
ER-32 QF	420532019-65	1:1	IC 80 bar
	0067732000		

Right angle drill/milling unit, both sides, LF=100

ER-32 QF	420532020-65	1:1	EC
	0067732000		

Driven Toolholders - Enhanced Program

Straight drill/milling unit

ER 40	410126001-65	1:1	EC
	00675000079		

Straight milling unit with combination mill arbor DIN 6358

Ø 22	410222002-65	1:1	EC
	00675000483		
Ø 1"	410225002-65	1:1	EC
	00675000483		

Straight offset drill/milling unit

ER-32 QF	420132037-65	1:1	EC
	0067732000		
ER-32 QF	420132038-65	1:1	IC 80 bar
	0067732000		
ER-25 QF	420125010-65	1:2	EC
	0067725001		
ER-25 QF	420125011-65	1:2	IC 80 bar
	0067725001		

Right angle drill/milling unit, LF=100

ER 40	410526007-65	1:1	EC
	00675000079		
ER 40	410526008-65	1:1	IC 80 bar
	00675000079		

© WTO GmbH * Subject to change without notice * www.wto.de

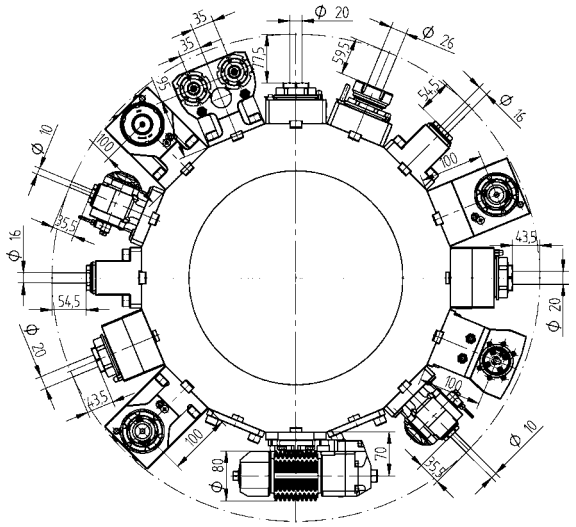

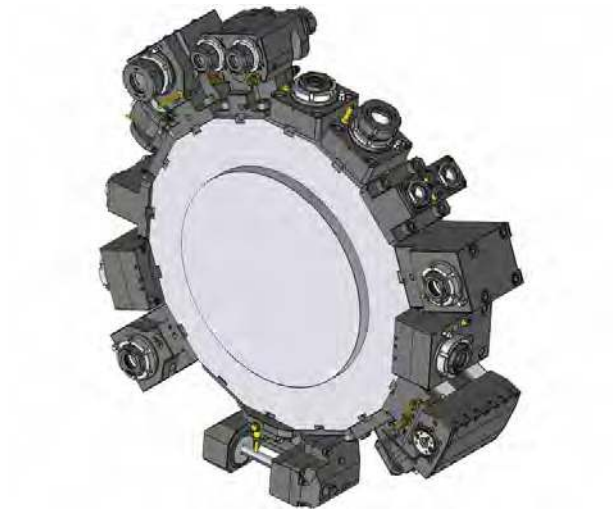

Driven Toolholders - Enhanced Program

Right angle drill/milling unit, LF=100

ER-25 QF	420525012-65	1:2	EC
	0067725001		
ER-25 QF	420525013-65	1:2	IC 80 bar
	0067725001		
ER-32 QF	420532029-65	2:1	EC
	0067732000		
ER-32 QF	420532030-65	2:1	IC 80 bar
	0067732000		

Right angle milling unit with combination mill arbor DIN 6358, LF=100

Ø 22	410622002-65	1:1	EC
	00675000483		
1"	410625002-65	1:1	EC
	00675000483		

Adjustable angle drill/milling unit

ER 16	411010002-65	1:1	EC
	00675000902		
ER 16	411010003-65	1:1	IC 80 bar
	00675000902		
ER 11	411007002-65	1:2	EC
	00675000914		
ER 11	411007003-65	1:2	IC 80 bar
	00675000914		

Driven Toolholders - Enhanced Program

Gear hobbing unit

Type 16-1	411500003-65	1:1	EC
Type 16-1	411500002-65	2:1	EC
	00675000927		
	160016161 Ø 16		
	160022161 Ø 22		
	160027161 Ø 27		
	160015161 Ø 5/8"		
	160019161 Ø 3/4"		
	160025161 Ø 1"		
	96394		

Straight drill/milling unit, both sides

ER 25	413002001-65	1:1	EC
	00675000907		

2-spindle - Right angle drill/milling unit, Y axis

ER 25	413502006-65	1:1	EC
	00675000915		
ER 25	413502007-65	1:1	IC 80 bar
	00675000915		

2-spindle - Right angle drill/milling unit, both sides, Y axis

ER 25	413502008-65	1:1	EC
	00675000915		

Broaching unit for ID and OD

TN765050	414532000-65	1:1	EC

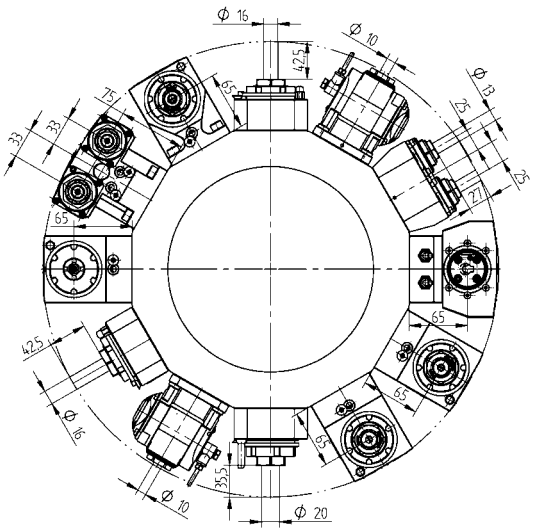

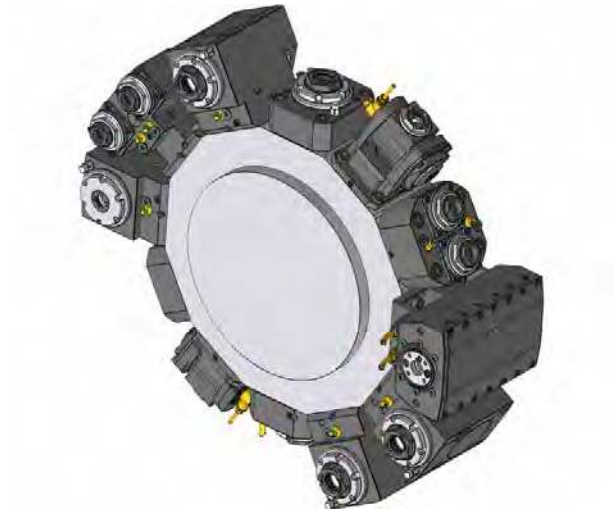

Driven Toolholders - QuickFlex®

Straight drill/milling unit

ER-25 QF	420125010-45	1:1	EC
	0067725000		
ER-25 QF	420125011-45	1:1	IC 80 bar
	0067725000		

Right angle drill/milling unit

ER-25 QF	420525010-45	1:1	EC
	0067725000		
ER-25 QF	420525011-45	1:1	IC 80 bar
	0067725000		

Driven Toolholders - Enhanced Program

Straight drill/milling unit

ER 32	410120002-45	1:1	EC
	0067525000		
ER 32	410120003-45	1:1	IC 80 bar
	0067525000		

Straight offset drill/milling unit

ER 25	410116006-45	1:1	EC
	00675000932		
ER 25	410116007-45	1:1	IC 80 bar
	00675000932		
ER 20	410113002-45	1:2	EC
	00675000939		
ER 20	410113003-45	1:2	IC 80 bar
	00675000939		
ER 16	410110000-45	1:3	EC
	00675000937		
ER 16	410110001-45	1:3	IC 80 bar
	00675000937		
ER 25	410116008-45	1.5:1	EC
	00675000932		
ER 25	410116009-45	1.5:1	IC 80 bar
	00675000932		

© WTO GmbH * Subject to change without notice * www.wto.de

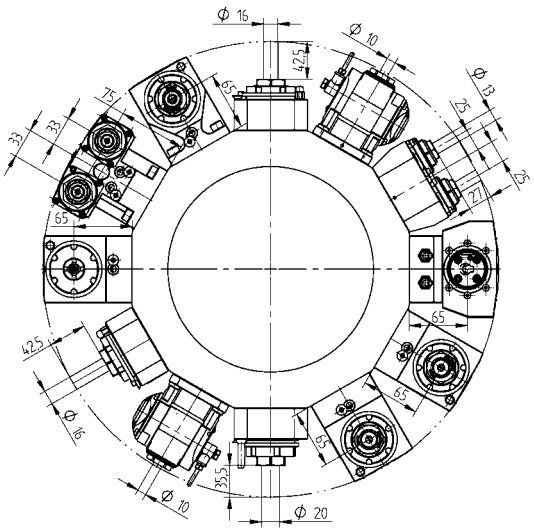

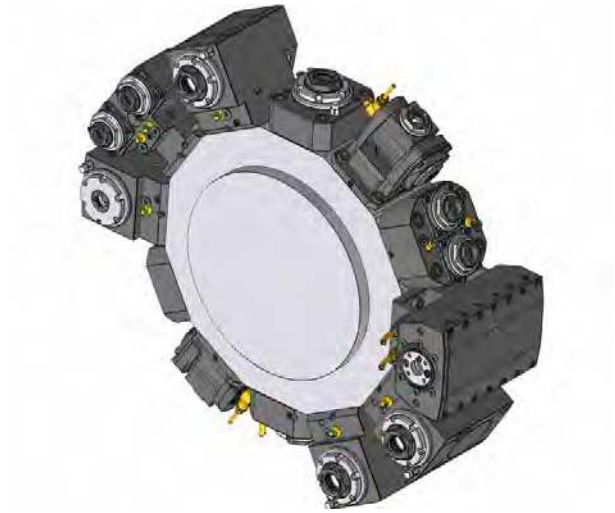

Driven Toolholders - Enhanced Program

Right angle drill/milling unit

ER 32	410520010-45	1:1	EC
	0067725000		
ER 32	410520007-45	1:1	IC 80 bar
	0067725000		
ER-20 QF	420520010-45	1:2	EC
	0067720001		
ER-20 QF	420520011-45	1:2	IC 80 bar
	0067720001		
ER 16	410810002-45	1:3	EC
	00675000841		
ER 16	410810003-45	1:3	IC 80 bar
	00675000841		
ER-25 QF	420525013-45	2:1	EC
	0067725000		
ER-25 QF	420525014-45	2:1	IC 80 bar
	0067725000		
ER 32	410520008-45	2:1	EC
	00675000827		
ER 32	410520009-45	2:1	IC 80 bar
	00675000827		

Adjustable angle drill/milling unit

ER 16	411010000-45	1:1	EC
	00675000902		
ER 16	411010001-45	1:1	IC 80 bar
	00675000902		
ER 11	411007000-45	1:2	EC
	00675000914		
ER 11	411007001-45	1:2	IC 80 bar
	00675000914		

Driven Toolholders - Enhanced Program

Slitting saw unit

Type 14-2	411500001-45	2.73:1	EC
	00675000489		
	160016142 Ø 16		
	160022142 Ø 22		
	160027142 Ø 27		
	160015142 Ø 5/8"		
	160019142 Ø 3/4"		
	160023142 Ø 7/8"		
	160025142 Ø 1"		

Straight drill/milling unit, double, Y axis

ER 20	413002007-45	1:1	EC
	00675001016		

2-spindle - Face drill/milling unit, Y axis

ER 20	413502000-45	1:1	EC
	00675001016		

Broaching unit for ID and OD

TN765050	414532001-45	1:1	EC

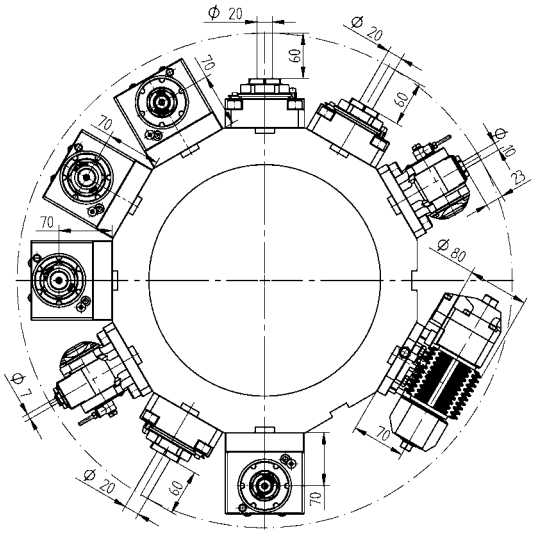

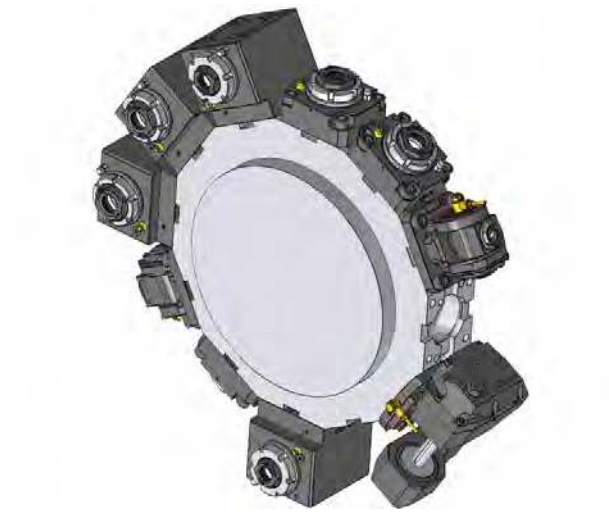

Driven Toolholders - QuickFlex®

Straight drill/milling unit

ER-32 QF	420132010-63 CB-4782B 0067732000	1:1	EC
ER-32 QF	420132011-63 CB-4782A 0067732000	1:1	IC 80 bar

Right angle drill/milling unit

ER-32 QF	420532010-63 CB-4783B 0067732000	1:1	EC
ER-32 QF	420532011-63 CB-4783A 0067732000	1:1	IC 80 bar

Driven Toolholders - Enhanced Program

Straight milling unit with combination mill arbor DIN 6358

Ø 27	410227001-63 00675000245	1:1	EC

Right angle drill/milling unit

ER-25 QF	420525010-63 0067725001	1:2	EC
ER-25 QF	420525011-63 0067725001	1:2	IC 80 bar

Right angle milling unit with combination mill arbor DIN 6358

Ø 22	410622001-63 00675000483	2:1	EC
Ø 27	410627002-63 00675000245	2:1	EC
Ø 1"	410625000-63 00675000483	2:1	EC

Adjustable angle drill/milling unit

ER 16	411010000-63 00675000902	1:1	EC
ER 16	411010001-63 00675000902	1:1	IC 80 bar
ER 11	411007000-63 00675000914	1:2	EC
ER 11	411007001-63 00675000914	1:2	IC 80 bar

© WTO GmbH * Subject to change without notice * www.wto.de

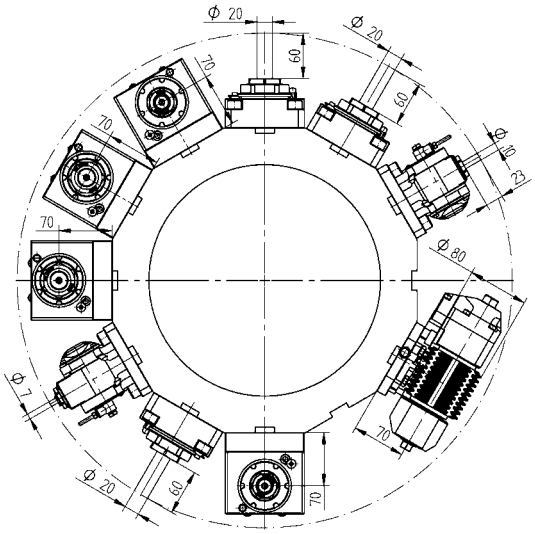

Driven Toolholders - Enhanced Program

Gear hobbing unit

Type 16-1	411500000-63	1:1	EC
Type 16-1	411500001-63	2:1	EC

00675000927

160016161 Ø 16

160022161 Ø 22

160027161 Ø 27

160015161 Ø 5/8"

160019161 Ø 3/4"

160025161 Ø 1"

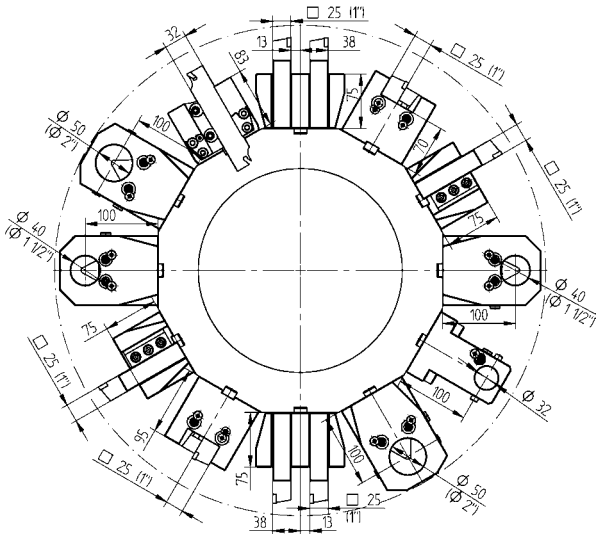

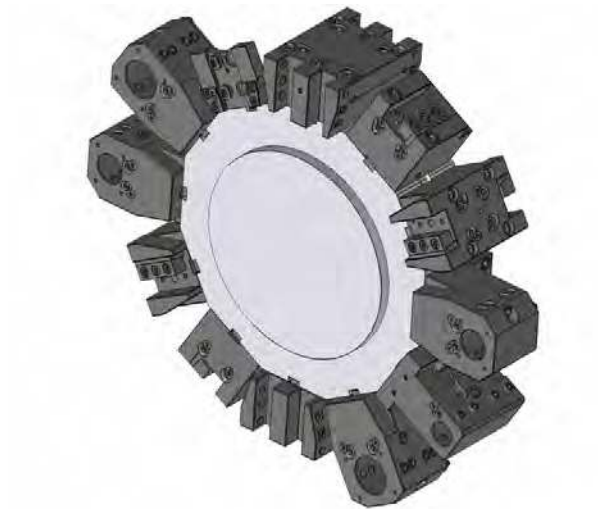

Static Toolholders - Standard Program

OD cutting holder

25	48-92428	
1"	48-92466	

OD cutting holder, HP-IC

25	48-92428-HP	IC 80 bar
1"	48-92466-HP	IC 80 bar

OD cutting holder, both sides

25	48-92438
1"	48-92472

OD cutting holder, both sides, HP-IC

25	48-92438-HP	IC 80 bar
1"	48-92472-HP	IC 80 bar

Face cutting holder

25	48-86719
1"	48-86720

Face cutting holder, HP-IC

25	48-109249-HP	IC 80 bar
1"	48-109250-HP	IC 80 bar

Combination toolholder, LF=100

Ø 40	48-92397	IC 80 bar
	241140020 ER32	
	241140026 ER40	
Ø 50	48-92467	IC 80 bar
Ø 1 1/2"	48-92468	IC 80 bar
	2411150020 ER32	
Ø 2"	48-92469	IC 80 bar

Static Toolholders - Standard Program

Boring bar holder, both sides

Ø 32	48-101033

Cover plate

48-87089

© WTO GmbH * Subject to change without notice * www.wto.de

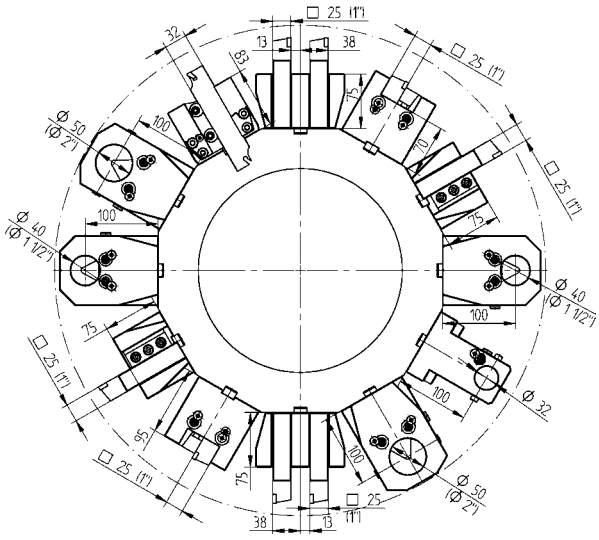

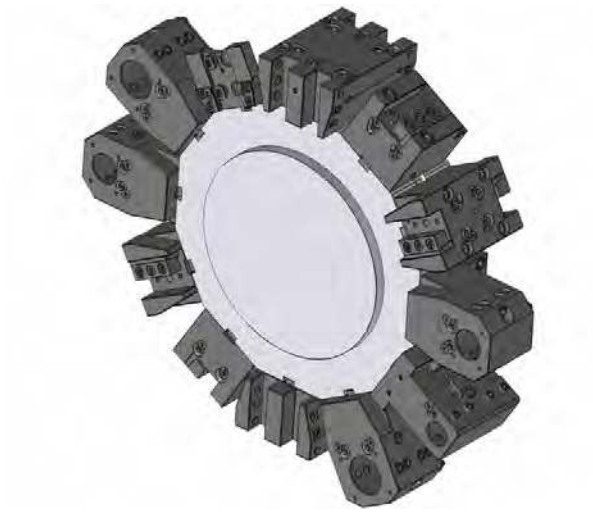

Static Toolholders - Enhanced Program

OD cutting holder, double, Y axis

25(1")	48-86103

OD cutting holder, both sides, double, Y axis

25(1")	48-86150

Cut-off holder, adjustable

SH 32	48-99060

Cut-off holder, adjustable, HP-IC

SH 32	48-102256R	IC 80 bar
SH 32	48-102256L	IC 80 bar

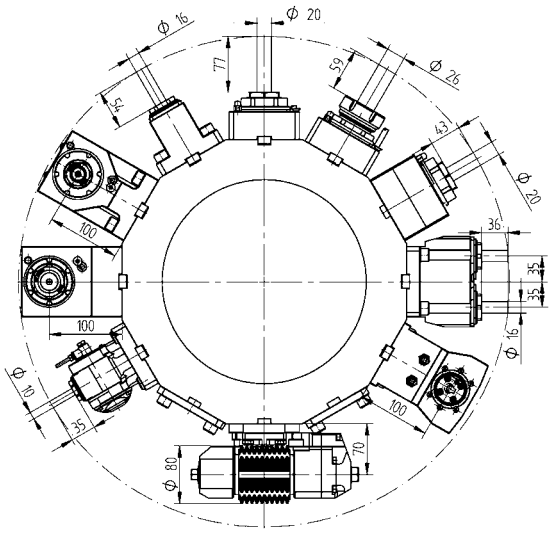

Driven Toolholders - QuickFlex®

Straight drill/milling unit

ER-32 QF	420132015-65	1:1	EC
	0067732000		
ER-32 QF	420132016-65	1:1	IC 80 bar
	0067732000		

Right angle drill/milling unit, LF=100

ER-32 QF	420532018-65	1:1	EC
	0067732000		
ER-32 QF	420532019-65	1:1	IC 80 bar
	0067732000		

Right angle drill/milling unit, both sides, LF=100

ER-32 QF	420532020-65	1:1	EC
	0067732000		

Driven Toolholders - Enhanced Program

Straight drill/milling unit

ER 40	410126001-65	1:1	EC
	00675000079		

Straight milling unit with combination mill arbor DIN 6358

Ø 22	410222002-65	1:1	EC
	00675000483		
Ø 1"	410225002-65	1:1	EC
	00675000483		

Straight offset drill/milling unit

ER-32 QF	420132037-65	1:1	EC
	0067732000		
ER-32 QF	420132038-65	1:1	IC 80 bar
	0067732000		
ER-25 QF	420125010-65	1:2	EC
	0067725001		
ER-25 QF	420125011-65	1:2	IC 80 bar
	0067725001		

Right angle drill/milling unit, LF=100

ER 40	410526007-65	1:1	EC
	00675000079		
ER 40	410526008-65	1:1	IC 80 bar
	00675000079		

© WTO GmbH * Subject to change without notice * www.wto.de

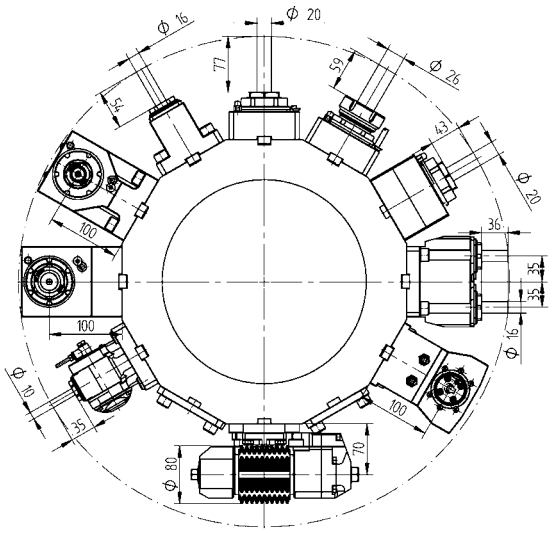

Driven Toolholders - Enhanced Program

Right angle drill/milling unit, LF=100

ER-25 QF	420525012-65	1:2	EC
	0067725001		
ER-25 QF	420525013-65	1:2	IC 80 bar
	0067725001		
ER-32 QF	420532029-65	2:1	EC
	0067732000		
ER-32 QF	420532030-65	2:1	IC 80 bar
	0067732000		

Right angle milling unit with combination mill arbor DIN 6358, LF=100

Ø 22	410622002-65	1:1	EC
	00675000483		
1"	410625002-65	1:1	EC
	00675000483		

Adjustable angle drill/milling unit

ER 16	411010002-65	1:1	EC
	00675000902		
ER 16	411010003-65	1:1	IC 80 bar
	00675000902		
ER 11	411007002-65	1:2	EC
	00675000914		
ER 11	411007003-65	1:2	IC 80 bar
	00675000914		

Driven Toolholders - Enhanced Program

Gear hobbing unit

Type 16-1	411500003-65	1:1	EC
Type 16-1	411500002-65	2:1	EC
	00675000927		
	160016161 Ø 16		
	160022161 Ø 22		
	160027161 Ø 27		
	160015161 Ø 5/8"		
	160019161 Ø 3/4"		
	160025161 Ø 1"		
	96394		

Straight drill/milling unit, both sides

ER 25	413002001-65	1:1	EC
	00675000907		

Straight drill/milling unit, double, Y axis

ER 25	413002004-65	1:1	EC
	00675000907		

Broaching unit for ID and OD

TN765050	414532000-65	1:1	EC

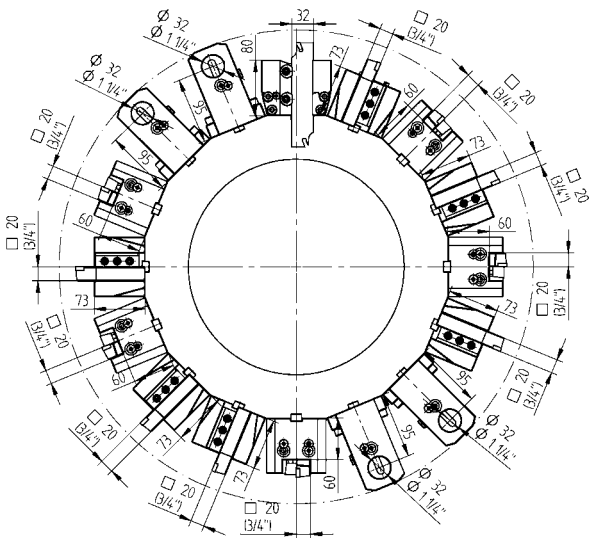

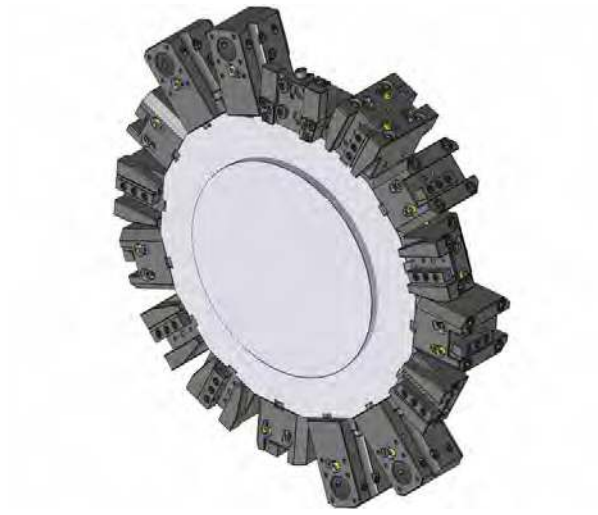

Static Toolholders - Standard Program

OD cutting holder

20	48-92036	
3/4"	48-92037	

OD cutting holder, HP-IC

20	48-92036-HP	IC 80 bar
3/4"	48-92037-HP	IC 80 bar

OD cutting holder, both sides

20	48-92038
3/4"	48-92039

OD cutting holder, both sides, HP-IC

20	48-92038-HP	IC 80 bar
3/4"	48-92039-HP	IC 80 bar

Face cutting holder

20	48-92045
3/4"	48-92046

Face cutting holder, HP-IC

20	48-92045-HP	IC 80 bar
3/4"	48-92046-HP	IC 80 bar

Combination toolholder, universal, LF=95

Ø 32	48-109277	IC 80 bar
	241132020 ER32	
	241132016 ER25	
Ø 1 1/4"	48-109278	IC 80 bar
	2411125020 ER32	

Static Toolholders - Enhanced Program

Cut-off holder, adjustable

SH 32	48-103287

Cut-off holder, adjustable, HP-IC

SH 32	48-110160R	IC 80 bar
SH 32	48-110160L	IC 80 bar

© WTO GmbH * Subject to change without notice * www.wto.de

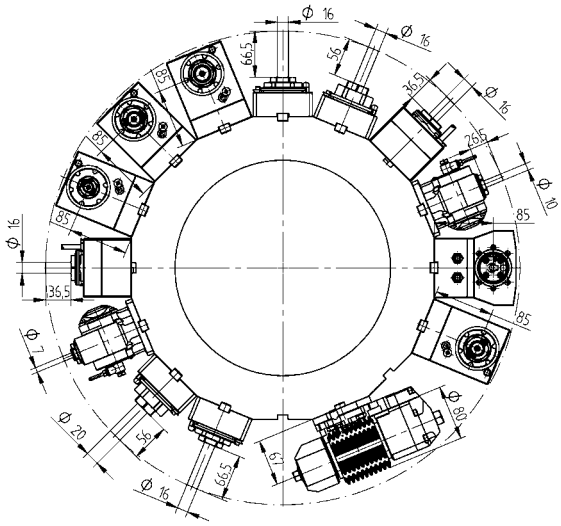

Driven Toolholders - QuickFlex®

Straight drill/milling unit

ER-25 QF	420125015-55	1:1	EC
	0067725000		
ER-25 QF	420125016-55	1:1	IC 80 bar
	0067725000		

Right angle drill/milling unit, LF=85

ER-25 QF	420525018-55	1:1	EC
	0067725000		
ER-25 QF	420525019-55	1:1	IC 80 bar
	0067725000		

Right angle drill/milling unit, both sides, LF=85

ER-25 QF	420525020-55	1:1	EC
	0067725000		

Driven Toolholders - Enhanced Program

Straight drill/milling unit

ER 32	410120010-55	1:1	EC
	0067725000		
ER 32	410120011-55	1:1	IC 80 bar
	0067725000		

Straight milling unit with combination mill arbor DIN 6358

Ø 22	410222004-55	1:1	EC
	00675000483		
Ø 3/4"	410219002-55	1:1	EC
	00675000483		

Straight offset drill/milling unit

ER 25	410116029-55	1:1	EC
	00675000932		
ER 25	410116030-55	1:1	IC 80 bar
	00675000932		
ER 20	410113009-55	1:2	EC
	00675000939		
ER 20	410113010-55	1:2	IC 80 bar
	00675000939		
ER 16	410410004-55	1:3	EC
	00675000937		
ER 16	410410005-55	1:3	IC 80 bar
	00675000937		

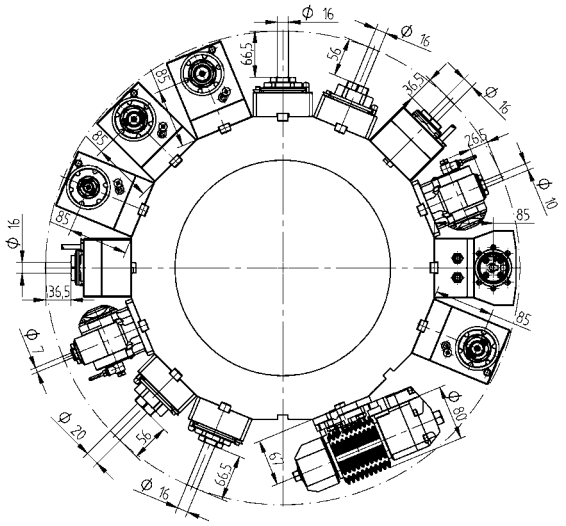

Driven Toolholders - Enhanced Program

Right angle drill/milling unit, LF=85

ER 32	410520030-55	1:1	EC
	0067725000		
ER 32	410520031-55	1:1	IC 80 bar
	0067725000		
ER-20 QF	420520014-55	1:2	EC
	0067720001		
ER-20 QF	420520015-55	1:2	IC 80 bar
	0067720001		
ER 16	410810020-55	1:3	EC
	00675000841		
ER 16	410810021-55	1:3	IC 80 bar
	00675000841		
ER-25 QF	420525032-55	2:1	EC
	0067725000		
ER-25 QF	420525033-55	2:1	IC 80 bar
	0067725000		

Right angle milling unit with combination mill arbor DIN 6358, LF=85

Ø 22	410622011-55	1:1	EC
	00675000483		
Ø 3/4"	410619006-55	1:1	EC
	00675000483		

Adjustable angle drill/milling unit

ER 16	411010005-55	1:1	EC
	00675000902		
ER 16	411010006-55	1:1	IC 80 bar
	00675000902		
ER 11	411007007-55	1:2	EC
	00675000914		
ER 11	411007008-55	1:2	IC 80 bar
	00675000914		

Driven Toolholders - Enhanced Program

Gear hobbing unit

Type 16-1	411500002-55	1:1	EC
Type 16-1	411500001-55	2:1	EC
	00675000927		
	160016161 Ø 16		
	160022161 Ø 22		
	160027161 Ø 27		
	160015161 Ø 5/8"		
	160019161 Ø 3/4"		
	160025161 Ø 1"		
	96394		

Broaching unit for ID and OD

TN765050	414532000-55	1:1	EC

© WTO GmbH * Subject to change without notice * www.wto.de

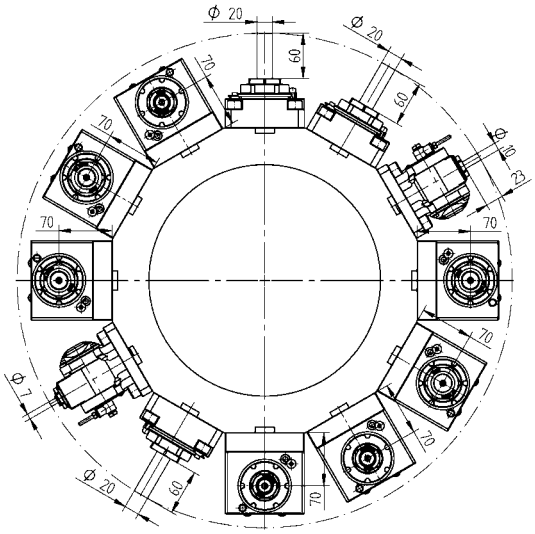

Driven Toolholders - QuickFlex®

Straight drill/milling unit

ER-32 QF	420132010-63 CB-4782B 0067732000	1:1	EC
ER-32 QF	420132011-63 CB-4782A 0067732000	1:1	IC 80 bar

Right angle drill/milling unit

ER-32 QF	420532010-63 CB-4783B 0067732000	1:1	EC
ER-32 QF	420532011-63 CB-4783A 0067732000	1:1	IC 80 bar

Driven Toolholders - Enhanced Program

Straight milling unit with combination mill arbor DIN 6358

Ø 27	410227001-63 00675000245	1:1	EC

Right angle drill/milling unit

ER-25 QF	420525010-63 0067725001	1:2	EC
ER-25 QF	420525011-63 0067725001	1:2	IC 80 bar

Right angle milling unit with combination mill arbor DIN 6358

Ø 22	410622001-63 00675000483	2:1	EC
Ø 27	410627002-63 00675000245	2:1	EC
Ø 1"	410625000-63 00675000483	2:1	EC

Adjustable angle drill/milling unit

ER 16	411010000-63 00675000902	1:1	EC
ER 16	411010001-63 00675000902	1:1	IC 80 bar
ER 11	411007000-63 00675000914	1:2	EC
ER 11	411007001-63 00675000914	1:2	IC 80 bar

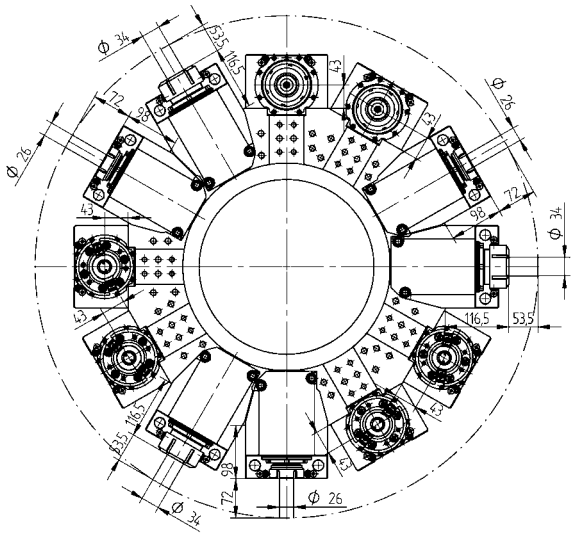

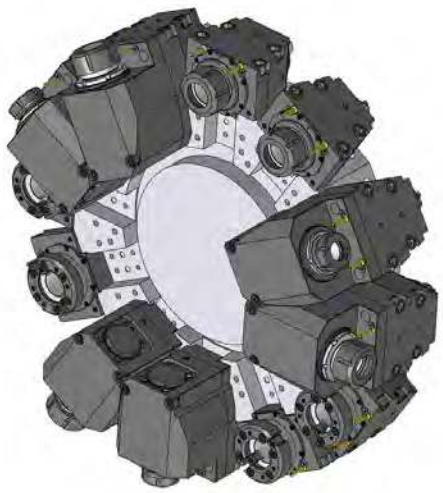

Driven Toolholders - Performance Series

Straight drill/milling unit

ER 50	410134000-00 T32137, T32247 00675000652	1:1	EC
ER 50	410134002-00 00675000652	1:1	IC 80 bar

Right angle drill/milling unit

ER 40	410526004-00 00675000781	1:1	EC
ER 40	410526005-00 00675000781	1:1	IC 80 bar

Right angle drill/milling unit

ER 50	410534002-00 00675000701	1:1	EC
ER 50	410534003-00 00675000701	1:1	IC 80 bar

Driven Toolholders - Enhanced Program

Straight drill/milling unit for system BT 40

BT MAS403	410140000-00	1:1	EC
BT MAS403	410140001-00	1:1	IC 80 bar

Straight drill/milling unit for system ISO/CAT 40

ISO 40	410140004-00 00675000875	1:1	EC
ISO 40	410140005-00 00675000875	1:1	IC 80 bar

© WTO GmbH * Subject to change without notice * www.wto.de

Standard reduction sleeves - cylindrical

Reduction sleeve Ø 25

240025006	ø 6
240025008	ø 8
240025010	ø 10
240025012	ø 12
240025016	ø 16
240025020	ø 20

Reduction sleeve Ø 32

240032006	ø 6
240032008	ø 8
240032010	ø 10
240032012	ø 12
240032016	ø 16
240032020	ø 20
240032025	ø 25

Reduction sleeve Ø 40

240040006	ø 6
240040008	ø 8
240040010	ø 10
240040012	ø 12
240040014	ø 14
240040016	ø 16
240040020	ø 20
240040025	ø 25
240040032	ø 32

Reduction sleeve Ø 50

240050010	ø 10
240050012	ø 12
240050016	ø 16
240050020	ø 20
240050025	ø 25
240050032	ø 32
240050040	ø 40

Reduction sleeve Ø 1"

2400100025	ø 1/4"
2400100031	ø 5/16"
2400100038	ø 3/8"
2400100050	ø 1/2"
2400100063	ø 5/8"
2400100075	ø 3/4"

Reduction sleeve Ø 1 1/4"

2400125038	ø 3/8"
2400125050	ø 1/2"
2400125063	ø 5/8"
2400125075	ø 3/4"
2400125088	ø 7/8"
2400125100	ø 1"

Standard reduction sleeves - cylindrical

Reduction sleeve Ø 1 1/2"

2400150038	ø 3/8"
2400150050	ø 1/2"
2400150063	ø 5/8"
2400150075	ø 3/4"
2400150088	ø 7/8"
2400150100	ø 1"
2400150125	ø 1 1/4"

Reduction sleeve Ø 2"

2400200050	ø 1/2"
2400200063	ø 5/8"
2400200088	ø 7/8"
2400200100	ø 1"
2400200125	ø 1 1/4"
2400200150	ø 1 1/2"
2400200175	ø 1 3/4"

Standard reduction sleeves - morse taper

Reduction sleeve Ø 32

240532001	MT 1
240532002	MT 2
240532003	MT 3

Reduction sleeve Ø 40

240540001	MT 1
240540002	MT 2
240540003	MT 3
240540004	MT 4

Reduction sleeve Ø 50

240550002	MT 2
240550003	MT 3
240550004	MT 4

Reduction sleeves for boring bar holders - cylindrical

Reduction sleeve Ø 25

24-T20180	ø 8
24-T20182	ø 10
24-T20184	ø 12
24-T20186	ø 16
24-T20188	ø 20

Reduction sleeve Ø 32

24-T20112	ø 8
24-T20114	ø 10
24-T20116	ø 12
24-T20118	ø 16
24-T20120	ø 20
24-T20122	ø 25

Reduction sleeve Ø 40

24-T20086	ø 8
24-T20088	ø 10
24-T20090	ø 12
24-T20092	ø 16
24-T20094	ø 20
24-T20096	ø 25
24-T20098	ø 32

Reduction sleeve Ø 50

24-T20160	ø 10
24-T20162	ø 12
24-T20164	ø 16
24-T20166	ø 20
24-T20168	ø 25
24-T20170	ø 32
24-T20172	ø 40

Reduction sleeve Ø 1"

24-T20181	ø 3/8"
24-T20183	ø 1/2"
24-T20185	ø 5/8"
24-T20187	ø 3/4"

Reduction sleeve Ø 1 1/2"

24-T20089	ø 3/8"
24-T20091	ø 1/2"
24-T20093	ø 5/8"
24-T20095	ø 3/4"
24-T20097	ø 1"
24-T20099	ø 1 1/4"

© WTO GmbH * Subject to change without notice * www.wto.de

Reduction sleeves for boring bar holders - cylindrical

Reduction sleeve Ø 2"

24-T20163	ø 1/2"
24-T20165	ø 5/8"
24-T20167	ø 3/4"
24-T20169	ø 1"
24-T20171	ø 1 1/4"
24-T20173	ø 1 1/2"

Reduction sleeves for boring bar holders - cylindrical, extended

Reduction sleeve Ø 32

24-T20124	ø 8
24-T20126	ø 10
24-T20128	ø 12
24-T20130	ø 16

Reduction sleeve Ø 40

24-T20106	ø 8
24-T20108	ø 10
24-T20110	ø 12
24-T20194	ø 16
24-T20196	ø 20
24-T20216	ø 25

Reduction sleeve Ø 1 1/2"

24-T20109	ø 3/8"
24-T20111	ø 1/2"
24-T20195	ø 5/8"
24-T20197	ø 3/4"

Reduction sleeves for boring bar holders - morse taper

Reduction sleeve Ø 40

24-T22046	MT 2
24-T22042	MT 3

© WTO GmbH * Subject to change without notice * www.wto.de

Collets DIN 6499B (ER/ESX)

ER 11	mm	inch
190011000	ø 7-0.5	ø 0.276-0.020
190011010	ø 1-0.5	ø 0.039-0.020
190011015	ø 1.5-1	ø 0.059-0.039
190011020	ø 2-1.5	ø 0.079-0.059
190011025	ø 2.5-2	ø 0.098-0.079
190011030	ø 3-2.5	ø 0.118-0.098
190011035	ø 3.5-3	ø 0.138-0.118
190011040	ø 4-3.5	ø 0.158-0.138
190011045	ø 4.5-4	ø 0.177-0.158
190011050	ø 5-4.5	ø 0.197-0.177
190011055	ø 5.5-5	ø 0.217-0.197
190011060	ø 6-5.5	ø 0.236-0.217
190011065	ø 6.5-6	ø 0.256-0.236
190011070	ø 7-6.5	ø 0.276-0.256

ER 16	mm	inch
190016000	ø 10-0.5	ø 0.394-0.020
190016010	ø 1-0.5	ø 0.039-0.020
190016020	ø 2-1	ø 0.079-0.039
190016030	ø 3-2	ø 0.118-0.079
190016040	ø 4-3	ø 0.158-0.118
190016050	ø 5-4	ø 0.197-0.158
190016060	ø 6-5	ø 0.236-0.197
190016070	ø 7-6	ø 0.276-0.236
190016080	ø 8-7	ø 0.315-0.276
190016090	ø 9-8	ø 0.354-0.315
190016100	ø 10-9	ø 0.394-0.354

ER 20	mm	inch
190020000	ø 13-1	ø 0.512-0.039
190020010	ø 1-0.5	ø 0.039-0.020
190020020	ø 2-1	ø 0.079-0.039
190020030	ø 3-2	ø 0.118-0.079
190020040	ø 4-3	ø 0.157-0.118
190020050	ø 5-4	ø 0.197-0.157
190020060	ø 6-5	ø 0.236-0.197
190020070	ø 7-6	ø 0.276-0.236
190020080	ø 8-7	ø 0.315-0.276
190020090	ø 9-8	ø 0.354-0.315
190020100	ø 10-9	ø 0.394-0.354
190020110	ø 11-10	ø 0.433-0.394
190020120	ø 12-11	ø 0.472-0.433
190020130	ø 13-12	ø 0.512-0.472

Collets DIN 6499B (ER/ESX)

ER 25	mm	inch
190025000	ø 16-1	ø 0.630-0.039
190025020	ø 2-1	ø 0.079-0.039
190025030	ø 3-2	ø 0.118-0.079
190025040	ø 4-3	ø 0.157-0.118
190025050	ø 5-4	ø 0.197-0.157
190025060	ø 6-5	ø 0.236-0.197
190025070	ø 7-6	ø 0.276-0.236
190025080	ø 8-7	ø 0.315-0.276
190025090	ø 9-8	ø 0.354-0.315
190025100	ø 10-9	ø 0.394-0.354
190025110	ø 11-10	ø 0.433-0.394
190025120	ø 12-11	ø 0.472-0.433
190025130	ø 13-12	ø 0.512-0.472
190025140	ø 14-13	ø 0.551-0.512
190025150	ø 15-14	ø 0.591-0.551
190025160	ø 16-15	ø 0.630-0.591

ER 32	mm	inch
190032000	ø 20-2	ø 0.787-0.079
190032030	ø 3-2	ø 0.118-0.079
190032040	ø 4-3	ø 0.157-0.118
190032050	ø 5-4	ø 0.197-0.157
190032060	ø 6-5	ø 0.236-0.197
190032070	ø 7-6	ø 0.276-0.236
190032080	ø 8-7	ø 0.315-0.276
190032090	ø 9-8	ø 0.354-0.315
190032100	ø 10-9	ø 0.394-0.354
190032110	ø 11-10	ø 0.433-0.394
190032120	ø 12-11	ø 0.472-0.433
190032130	ø 13-12	ø 0.512-0.472
190032140	ø 14-13	ø 0.551-0.512
190032150	ø 15-14	ø 0.591-0.551
190032160	ø 16-15	ø 0.630-0.591
190032170	ø 17-16	ø 0.669-0.630
190032180	ø 18-17	ø 0.709-0.669
190032190	ø 19-18	ø 0.748-0.709
190032200	ø 20-19	ø 0.787-0.748

Collets DIN 6499B (ER/ESX)

ER 40	mm	inch
190040000	ø 26-3	ø 1.024-0.118
190040040	ø 4-3	ø 0.157-0.118
190040050	ø 5-4	ø 0.197-0.157
190040060	ø 6-5	ø 0.236-0.197
190040070	ø 7-6	ø 0.276-0.236
190040080	ø 8-7	ø 0.315-0.276
190040090	ø 9-8	ø 0.354-0.315
190040100	ø 10-9	ø 0.394-0.354
190040110	ø 11-10	ø 0.433-0.394
190040120	ø 12-11	ø 0.472-0.433
190040130	ø 13-12	ø 0.512-0.472
190040140	ø 14-13	ø 0.551-0.512
190040150	ø 15-14	ø 0.591-0.551
190040160	ø 16-15	ø 0.630-0.591
190040170	ø 17-16	ø 0.669-0.630
190040180	ø 18-17	ø 0.709-0.669
190040190	ø 19-18	ø 0.748-0.709
190040200	ø 20-19	ø 0.787-0.748
190040210	ø 21-20	ø 0.827-0.787
190040220	ø 22-21	ø 0.866-0.827
190040230	ø 23-22	ø 0.906-0.866
190040240	ø 24-23	ø 0.945-0.906
190040250	ø 25-24	ø 0.984-0.945
190040260	ø 26-25	ø 1.024-0.984

ER 50	mm	inch
190050000	ø 34-10	ø 1.339-0.394
190050060	ø 6-4	ø 0.236-0.157
190050080	ø 8-6	ø 0.315-0.236
190050100	ø 10-8	ø 0.394-0.315
190050120	ø 12-10	ø 0.472-0.394
190050140	ø 14-12	ø 0.551-0.472
190050160	ø 16-14	ø 0.630-0.551
190050180	ø 18-16	ø 0,709-0,630
190050200	ø 20-18	ø 0.787-0.709
190050220	ø 22-20	ø 0.866-0.787
190050240	ø 24-22	ø 0.945-0.866
190050260	ø 26-24	ø 1.024-0.945
190050280	ø 28-26	ø 1.102-1.024
190050300	ø 30-28	ø 1.181-1.102
190050320	ø 32-30	ø 1.260-1.181
190050340	ø 34-32	ø 1.339-1.260

Collets DIN 6499D (ER/ESX) - sealed, for IC

ER 11	mm	inch
191011030	ø 3	
191011040	ø 4	
191011050	ø 5	
191011060	ø 6	
191111013-in		ø 0.125
191111019-in		ø 0.188
191111025-in		ø 0.25

ER 16	mm	inch
191016000	ø 3-10	
191016030	ø 3	
191016040	ø 4	
191016050	ø 5	
191016060	ø 6	
191016070	ø 7	
191016080	ø 8	
191016090	ø 9	
191016100	ø 10	
191116001		ø 0.125-0.375
191116013-in		ø 0.125
191116019-in		ø 0.188
191116025-in		ø 0.25
191116031-in		ø 0.313
191116038-in		ø 0.375

ER 20	mm	inch
191020000	ø 3-12	
191020030	ø 3	
191020040	ø 4	
191020050	ø 5	
191020060	ø 6	
191020070	ø 7	
191020080	ø 8	
191020090	ø 9	
191020100	ø 10	
191020110	ø 11	
191020120	ø 12	
191120001		ø 0.125-0.5
191120013-in		ø 0.125
191120019-in		ø 0.188
191120025-in		ø 0.25
191120031-in		ø 0.313
191120038-in		ø 0.375
191120044-in		ø 0.438
191120050-in		ø 0.5

© WTO GmbH * Subject to change without notice * www.wto.de

Collets DIN 6499D (ER/ESX) - sealed, for IC

ER 25	mm	inch
191025000	ø 4-16	
191025030	ø 3	
191025040	ø 4	
191025050	ø 5	
191025060	ø 6	
191025070	ø 7	
191025080	ø 8	
191025090	ø 9	
191025100	ø 10	
191025110	ø 11	
191025120	ø 12	
191025130	ø 13	
191025140	ø 14	
191025150	ø 15	
191025160	ø 16	
191125001		ø 0.25-0.625
191125025-in		ø 0.25
191125031-in		ø 0.313
191125038-in		ø 0.375
191125044-in		ø 0.438
191125050-in		ø 0.5
191125056-in		ø 0.563
191125063-in		ø 0.625

ER 32	mm	inch
191032000	ø 4-20	
191032030	ø 3	
191032040	ø 4	
191032050	ø 5	
191032060	ø 6	
191032070	ø 7	
191032080	ø 8	
191032090	ø 9	
191032100	ø 10	
191032110	ø 11	
191032120	ø 12	
191032130	ø 13	
191032140	ø 14	
191032150	ø 15	
191032160	ø 16	
191032170	ø 17	
191032180	ø 18	
191032190	ø 19	
191032200	ø 20	
191132001		ø 0.25-0.75
191132025-in		ø 0.25
191132031-in		ø 0.313
191132038-in		ø 0.375
191132044-in		ø 0.438
191132050-in		ø 0.5
191132056-in		ø 0.563
191132063-in		ø 0.625
191132069-in		ø 0.688
191132075-in		ø 0.75

Collets DIN 6499D (ER/ESX) - sealed, for IC

ER 40	mm	inch
191040060	ø 6	
191040080	ø 8	
191040100	ø 10	
191040120	ø 12	
191040140	ø 14	
191040160	ø 16	
191040180	ø 18	
191040200	ø 20	
191040220	ø 22	
191040250	ø 25	
191140025-in		ø 0.25
191140031-in		ø 0.313
191140038-in		ø 0.375
191140044-in		ø 0.438
191140050-in		ø 0.5
191140056-in		ø 0.563
191140063-in		ø 0.625
191140069-in		ø 0.688
191140075-in		ø 0.75
191140088-in		ø 0.875
191140100-in		ø 1

WTO worldwide

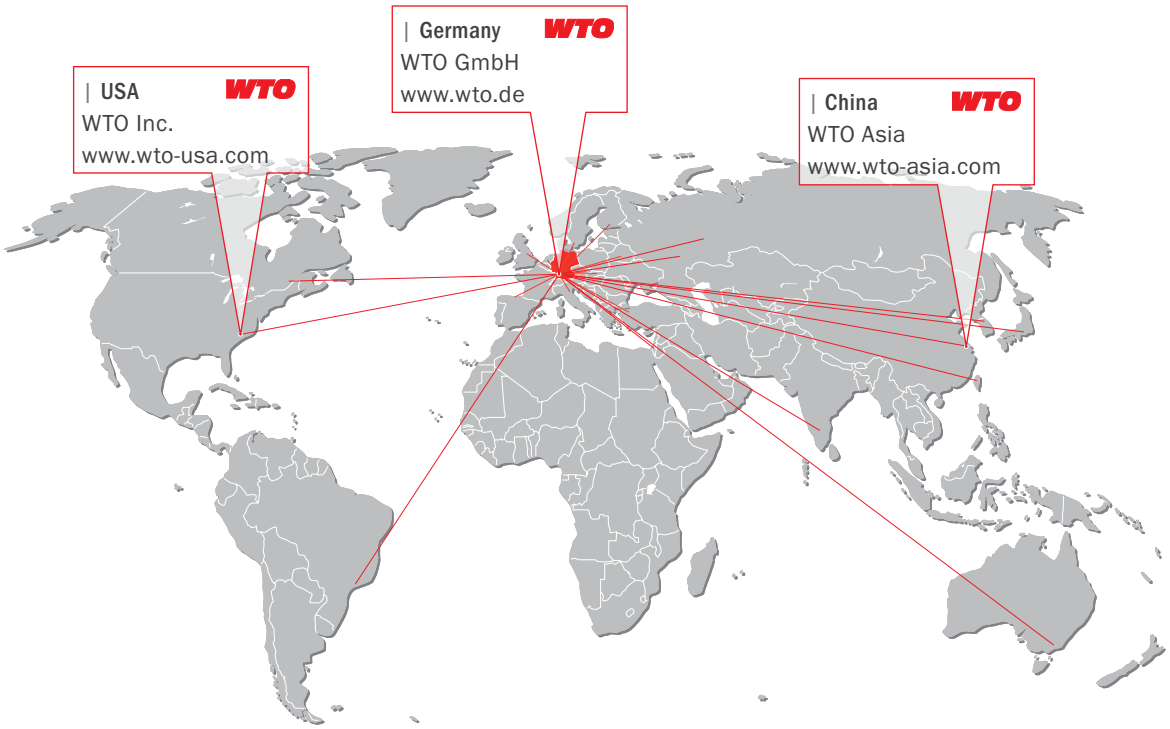

WTO GmbH
Auf der oberen Au 45
77797 Ohlsbach
Germany

WTO USA
13900-F
South Lakes Drive
Charlotte, NC 28273
USA

WTO Asia
Room 109-110, Building 2
No. 228 Banting Road
Jiuting Town,
Songjiang District
201615 Shanghai
China

Our distribution partners. Competence right there.

| Australia
Dimac Tooling Ltd.
sales@dimac.com.au

| Belarus
LLC "PMI Engineering"
tool@pmi.by

| Brazil
TF2
tfdois@tfdois.com.br

| Canada
Mittmann Industrial Inc.
info@mittmann.com

| China
Shanghai Gangde
wtocando@yahoo.com

| Czech Republic
ALBA precision, spol. s.r.o.
info@albaprecision.cz

| Denmark
Tool-part
cj@tool-part.dk

| Finland
Suomen Terätuonti Oy
myynti@stt.as

| France
Philippe Tagliafero
pta@wto.de

| Great Britain
Cutwel Ltd.
sales@cutwel.net

| India
Ulhas Patil
u.patil@wto-asia.com

| Israel
E.Y.A.R. Ltd.
boris@eyar.co.il

| Italy
Prymark srl
commerciale@prymark.it

| Japan
NK Works Co. Ltd.
k_samba@nk-works.co.jp

| Korea
WTO Office Korea
is.chon@wto-korea.com

| Mexico
Workholding Engineering De México
info@wem.com.mx

| Netherlands
Toologic BeNeLux B.V.
info@toologic-benelux.nl

| Norway
Helge Karlsen Verktøy og Maskin AS
hkvm@hkvm.no

| Poland
ARCO Andrzej Rudenko
info@arcotools.pl

| Romania
SC Elif Trading SRL
bulent.ozkan@eliftrading.com

| Russia
WTO Office Russia
office@wto-russia.com

| Slovakia
ALBA precision s.r.o.
albaprecision@albaprecision.sk

| Spain
ITALMATIC, S.A.
italmatic@italmatic.es

| Sweden
Komet Scandinavia AB
scandinavia@kometgroup.com

| Switzerland
Utilis AG
info@utilis.com

| Taiwan
Kaiko Co., Ltd.
info@kaiko.com.tw

| Turkey
MYK CNC MAKINA SAN. VE
huseyin.tatlidil@mykcnc.com.tr

| Ukraine
„LLC" SPA Stankopromimport
info@phoenix-ua.com

09 I 2019 en