# Toolholder Program

**L160, 230MA/LMA/LMSA**
**L300MA/MC/LMA/LMC/MSA/MSC/LMSA**
**L400 MA/LMA/MC/LMC**
**L600, 700, 800MA/LMA**
**L2100Y/SY**
**L2000, 2600, 3000Y/LY/SY/LSY**
**LM1600, 1800TTMS/TTSY**
**LM2000, 2500TTM/TTMS/TTSY**

# QuickFlex®

The new quick change system for
high performance and precision.

Minimal investment, maximal expandability.

Designed
for
BMT Turrets

# Contents


| | | |
|---|---|---|
| L160, 230MA/LMA/LMSA | Page | 4 - 7 |
| L300MA/MC/LMA/LMC/MSA/MSC/LMSA | Page | 8 - 10 |
| L400 MA/LMA/MC/LMC | Page | 11 - 12 |
| L600, 700, 800MA/LMA | Page | 13 - 14 |
| L2100Y/SY | Page | 15 - 17 |
| L2000, 2600, 3000Y/LY/SY/LSY | Page | 18 - 21 |
| LM1600, 1800TTMS/TTSY | Page | 22 - 24 |
| LM2000, 2500TTM/TTMS/TTSY | Page | 25 - 27 |
| Reduction sleeves | Page | 28 - 29 |
| Collets | Page | 30 - 32 |


**EC = External coolant supply**
**HP-IC = High pressure internal coolant supply through cutting tool**
**IC 80 bar = Internal and external coolant supply**
Max. coolant pressure = 80 bar
**IC 30 bar = Internal and external coolant supply**
Max. coolant pressure = 30 bar
Only use filtered coolant fluid (max. particle size = 50 µm)
Do not run without coolant
Do not use for machining abrasive materials such as cast iron, etc.

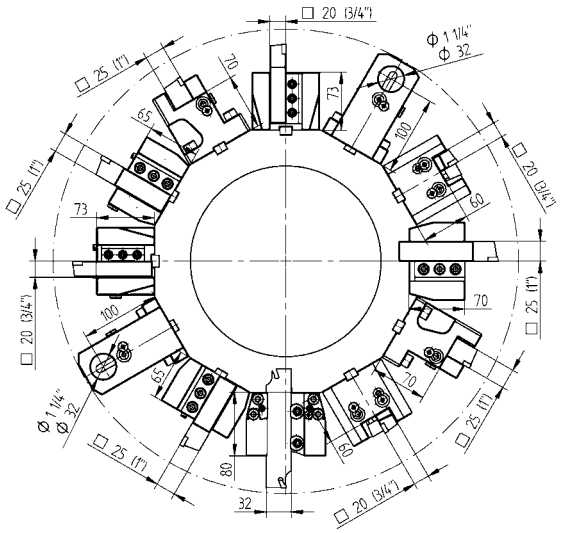


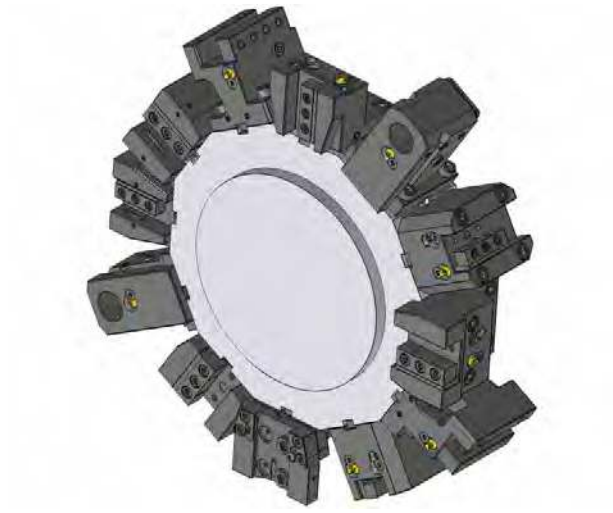

## Static Toolholders - Standard Program

**OD cutting holder**

| | | |
|---|---|---|
| **20** | 48-92036 | |
| **3/4"** | 48-92037 | |

**OD cutting holder, HP-IC**

| | | |
|---|---|---|
| **20** | 48-92036-HP | IC 80 bar |
| **3/4"** | 48-92037-HP | IC 80 bar |

**OD cutting holder**

| | |
|---|---|
| **25** | 48-87097 |
| **1"** | 48-87098 |

**OD cutting holder, HP-IC**

| | | |
|---|---|---|
| **25** | 48-87097-HP | IC 80 bar |
| **1"** | 48-87098-HP | IC 80 bar |

**OD cutting holder, both sides**

| | |
|---|---|
| **20** | 48-92038 |
| **3/4"** | 48-92039 |

**OD cutting holder, both sides, HP-IC**

| | | |
|---|---|---|
| **20** | 48-92038-HP | IC 80 bar |
| **3/4"** | 48-92039-HP | IC 80 bar |

**OD cutting holder, both sides**

| | |
|---|---|
| **25** | 48-87099 |
| **1"** | 48-87100 |

**OD cutting holder, both sides, HP-IC**

| | | |
|---|---|---|
| **25** | 48-87099-HP | IC 80 bar |
| **1"** | 48-87100-HP | IC 80 bar |

## Static Toolholders - Standard Program

**Face cutting holder**

| | |
|---|---|
| **20** | 48-92045 |
| **3/4"** | 48-92046 |

**Face cutting holder, HP-IC**

| | | |
|---|---|---|
| **20** | 48-92045-HP | IC 80 bar |
| **3/4"** | 48-92046-HP | IC 80 bar |

**Face cutting holder**

| | |
|---|---|
| **25** | 48-87101 |
| **1"** | 48-87102 |

**Face cutting holder, HP-IC**

| | | |
|---|---|---|
| **25** | 48-87101-HP | IC 80 bar |
| **1"** | 48-87102-HP | IC 80 bar |

**Combination toolholder, universal, LF=100**

| | | |
|---|---|---|
| **Ø 32** | 48-92043 | IC 80 bar |
| | 241132016 ER25 | |
| | 241132020 ER32 | |
| **Ø 1 1/4"** | 48-92044 | IC 80 bar |
| | 2411125020 ER32 | |



© WTO GmbH * Subject to change without notice * www.wto.de

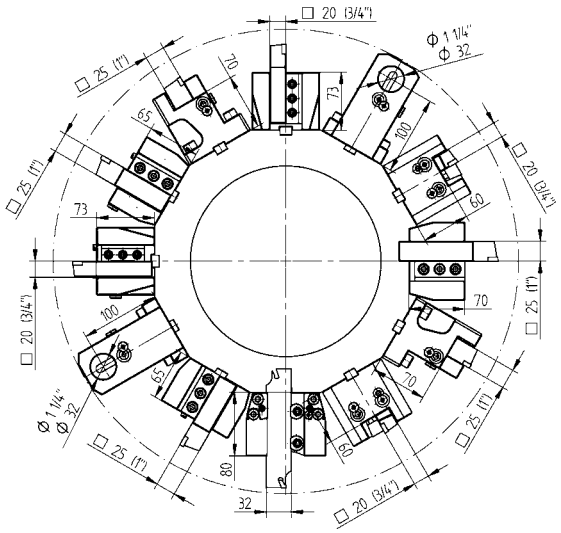

Static Toolholders - Enhanced Program

**Cut-off holder, adjustable**

| | | |
|---|---|---|
| **SH 32** | 48-103287 | |

**Cut-off holder, adjustable, HP-IC**

| | | |
|---|---|---|
| **SH 32** | 48-110160R | IC 80 bar |
| **SH 32** | 48-110160L | IC 80 bar |

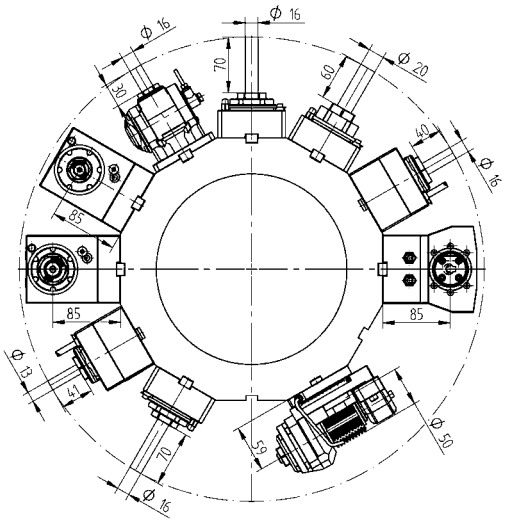

## Driven Toolholders - QuickFlex®

**Straight drill/milling unit**

| | | | |
|---|---|---|---|
| **ER-25 QF** | 420125015-55 | 1:1 | EC |
| | 0067725000 | | |
| **ER-25 QF** | 420125016-55 | 1:1 | IC 80 bar |
| | 0067725000 | | |

**Right angle drill/milling unit, LF=85**

| | | | |
|---|---|---|---|
| **ER-25 QF** | 420525018-55 | 1:1 | EC |
| | 0067725000 | | |
| **ER-25 QF** | 420525019-55 | 1:1 | IC 80 bar |
| | 0067725000 | | |

**Right angle drill/milling unit, both sides, LF=85**

| | | | |
|---|---|---|---|
| **ER-25 QF** | 420525020-55 | 1:1 | EC |
| | 0067725000 | | |

## Driven Toolholders - Enhanced Program

**Straight drill/milling unit**

| | | | |
|---|---|---|---|
| **ER 32** | 410120010-55 | 1:1 | EC |
| | 0067725000 | | |
| **ER 32** | 410120011-55 | 1:1 | IC 80 bar |
| | 0067725000 | | |

**Straight milling unit with combination mill arbor DIN 6358**

| | | | |
|---|---|---|---|
| **Ø 22** | 410222004-55 | 1:1 | EC |
| | 00675000483 | | |
| **Ø 3/4"** | 410219002-55 | 1:1 | EC |
| | 00675000483 | | |

**Straight offset drill/milling unit**

| | | | |
|---|---|---|---|
| **ER 25** | 410116029-55 | 1:1 | EC |
| | 00675000932 | | |
| **ER 25** | 410116030-55 | 1:1 | IC 80 bar |
| | 00675000932 | | |
| **ER 20** | 410113009-55 | 1:2 | EC |
| | 00675000939 | | |
| **ER 20** | 410113010-55 | 1:2 | IC 80 bar |
| | 00675000939 | | |
| **ER 16** | 410410004-55 | 1:3 | EC |
| | 00675000937 | | |
| **ER 16** | 410410005-55 | 1:3 | IC 80 bar |
| | 00675000937 | | |


© WTO GmbH * Subject to change without notice * www.wto.de

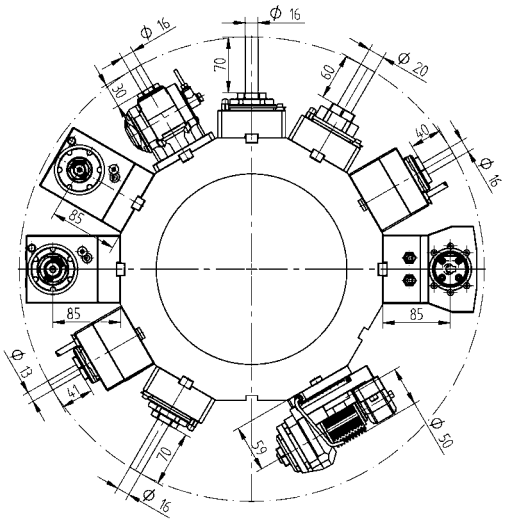

## Driven Toolholders - Enhanced Program

### Right angle drill/milling unit, LF=85

| | | | |
|---|---|---|---|
| **ER 32** | 410520030-55 | 1:1 | EC |
| | 0067725000 | | |
| **ER 32** | 410520031-55 | 1:1 | IC 80 bar |
| | 0067725000 | | |
| **ER-20 QF** | 420520014-55 | 1:2 | EC |
| | 0067720001 | | |
| **ER-20 QF** | 420520015-55 | 1:2 | IC 80 bar |
| | 0067720001 | | |
| **ER 16** | 410810020-55 | 1:3 | EC |
| | 00675000841 | | |
| **ER 16** | 410810021-55 | 1:3 | IC 80 bar |
| | 00675000841 | | |
| **ER-25 QF** | 420525032-55 | 2:1 | EC |
| | 0067725000 | | |
| **ER-25 QF** | 420525033-55 | 2:1 | IC 80 bar |
| | 0067725000 | | |

### Right angle milling unit with combination mill arbor DIN 6358, LF=85

| | | | |
|---|---|---|---|
| **Ø 22** | 410622011-55 | 1:1 | EC |
| | 00675000483 | | |
| **Ø 3/4"** | 410619006-55 | 1:1 | EC |
| | 00675000483 | | |

### Adjustable angle drill/milling unit

| | | | |
|---|---|---|---|
| **ER 16** | 411010005-55 | 1:1 | EC |
| | 00675000902 | | |
| **ER 16** | 411010006-55 | 1:1 | IC 80 bar |
| | 00675000902 | | |
| **ER 11** | 411007007-55 | 1:2 | EC |
| | 00675000914 | | |
| **ER 11** | 411007008-55 | 1:2 | IC 80 bar |
| | 00675000914 | | |

## Driven Toolholders - Enhanced Program

### Gear hobbing unit

| | | | |
|---|---|---|---|
| **Type 15-2** | 410900002-55 | 1:1 | EC |
| | 00675001015 | | |
| | 160008152 Ø 8 | | |
| | 160010152 Ø 10 | | |
| | 160013152 Ø 13 | | |
| | 160016152 Ø 16 | | |
| | 160022152 Ø 22 | | |
| | 160015152 Ø 5/8" | | |
| | 160019152 Ø 3/4" | | |
| | 96394 | | |

### Broaching unit for ID and OD

| | | | |
|---|---|---|---|
| **TN765050** | 414532000-55 | 1:1 | EC |

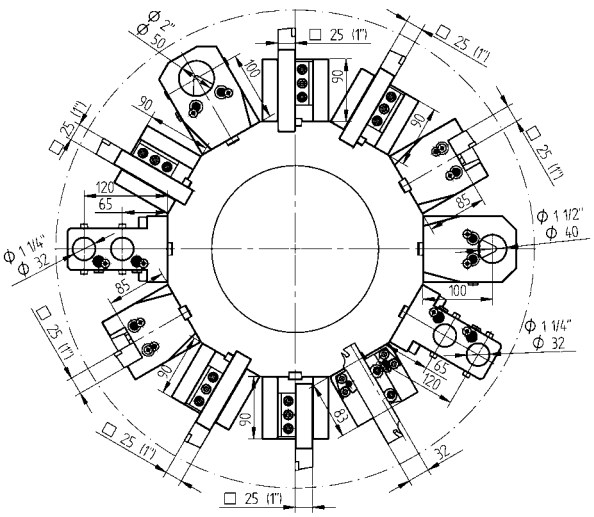


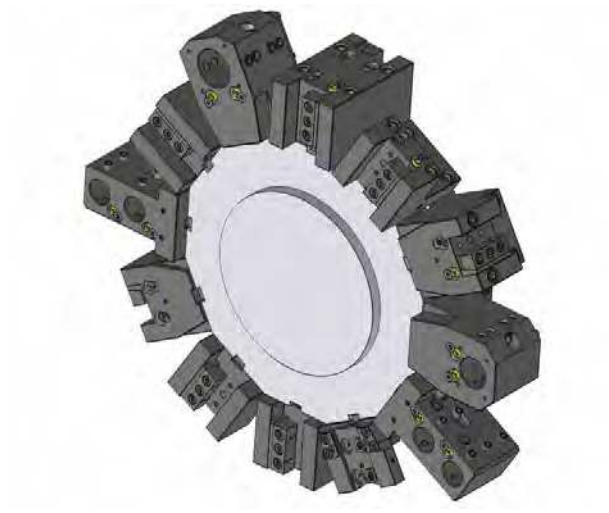

## Static Toolholders - Standard Program

**OD cutting holder, long**

| | |
|---|---|
| **25** | 48-86711 |
| **1"** | 48-86712 |

**OD cutting holder, both sides, long**

| | |
|---|---|
| **25** | 48-84523 |
| **1"** | 48-86718 |

**Face cutting holder, long**

| | |
|---|---|
| **25** | 48-92958 |
| **1"** | 48-92959 |

**Combination toolholder, LF=100**

| | | |
|---|---|---|
| **Ø 40** | 48-92397 | IC 80 bar |
| | 241140020 ER32 | |
| | 241140026 ER40 | |
| **Ø 50** | 48-92467 | IC 80 bar |
| **Ø 1 1/2"** | 48-92468 | IC 80 bar |
| | 2411150020 ER32 | |
| **Ø 2"** | 48-92469 | IC 80 bar |

**Boring bar holder, double**

| | |
|---|---|
| **Ø 32** | 48-84524 |
| **Ø 1 1/4"** | 48-86905 |

**Cover plate**

48-87089

## Static Toolholders - Enhanced Program

**Cut-off holder, adjustable**

| | | |
|---|---|---|
| **SH 32** | 48-99060 | |

**Cut-off holder, adjustable, long**

| | | |
|---|---|---|
| **SH 32** | 48-100084 | |

**Cut-off holder, adjustable, HP-IC**

| | | |
|---|---|---|
| **SH 32** | 48-102256R | IC 80 bar |
| **SH 32** | 48-102256L | IC 80 bar |

**Cut-off holder, adjustable, long, HP-IC**

| | | |
|---|---|---|
| **SH 32** | 48-100082R | IC 80 bar |
| **SH 32** | 48-100082L | IC 80 bar |



© WTO GmbH * Subject to change without notice * www.wto.de

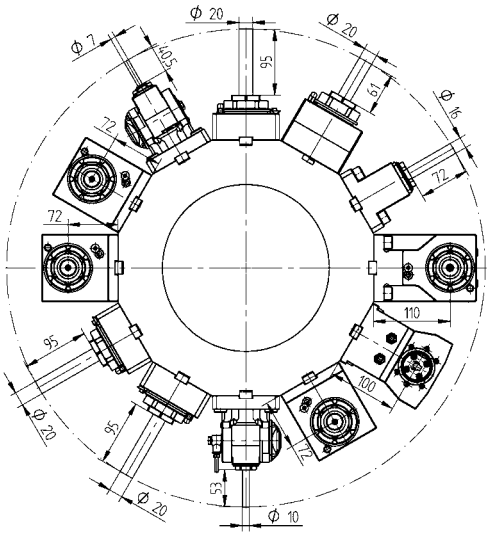


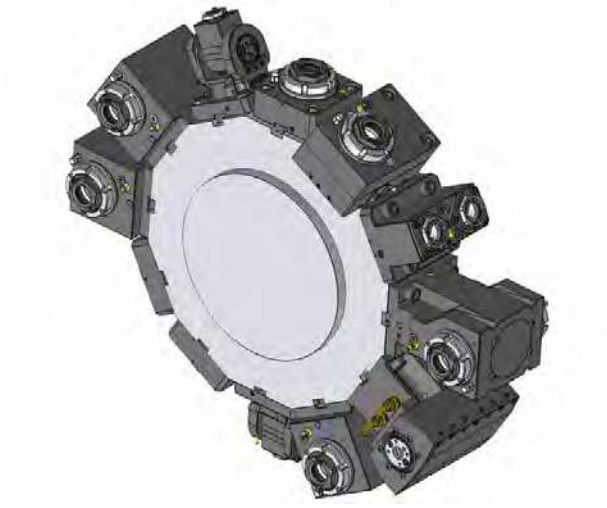

## Driven Toolholders - QuickFlex®

**Straight drill/milling unit**

| | | | |
|---|---|---|---|
| **ER-32 QF** | 420132015-65 | 1:1 | EC |
| | 0067732000 | | |
| **ER-32 QF** | 420132016-65 | 1:1 | IC 80 bar |
| | 0067732000 | | |

**Right angle drill/milling unit, LF=72**

| | | | |
|---|---|---|---|
| **ER-32 QF** | 420532015-65 | 1:1 | EC |
| | 0067732000 | | |
| **ER-32 QF** | 420532016-65 | 1:1 | IC 80 bar |
| | 0067732000 | | |

**Right angle drill/milling unit, both sides, LF=110**

| | | | |
|---|---|---|---|
| **ER-32 QF** | 420532087-65 | 1:1 | EC |
| | 0067732000 | | |

## Driven Toolholders - Enhanced Program

**Straight drill/milling unit**

| | | | |
|---|---|---|---|
| **ER 40** | 410126001-65 | 1:1 | EC |
| | 00675000079 | | |

**Straight milling unit with combination mill arbor DIN 6358**

| | | | |
|---|---|---|---|
| **Ø 22** | 410222002-65 | 1:1 | EC |
| | 00675000483 | | |
| **Ø 1"** | 410225002-65 | 1:1 | EC |
| | 00675000483 | | |

**Straight offset drill/milling unit**

| | | | |
|---|---|---|---|
| **ER-32 QF** | 420132037-65 | 1:1 | EC |
| | 0067732000 | | |
| **ER-32 QF** | 420132038-65 | 1:1 | IC 80 bar |
| | 0067732000 | | |
| **ER-25 QF** | 420125010-65 | 1:2 | EC |
| | 0067725001 | | |
| **ER-25 QF** | 420125011-65 | 1:2 | IC 80 bar |
| | 0067725001 | | |

**Face drill/milling unit for ER collets, LF=72**

| | | | |
|---|---|---|---|
| **ER 40** | 410526005-65 | 1:1 | EC |
| | 00675000781 | | |
| **ER 40** | 410526006-65 | 1:1 | IC 80 bar |
| | 00675000781 | | |

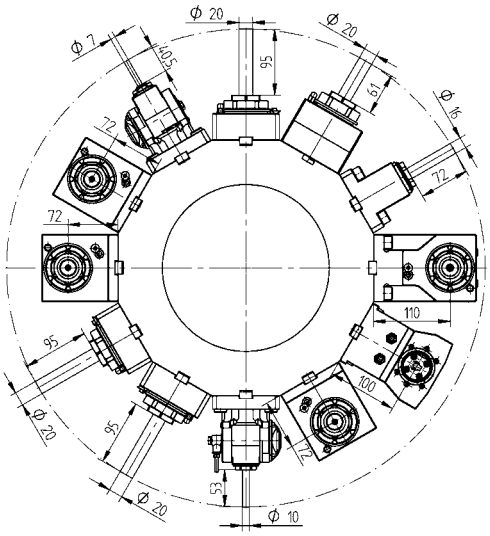


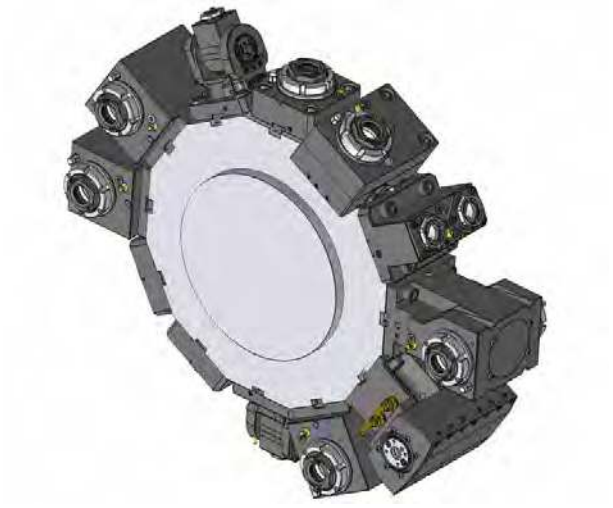

Driven Toolholders - Enhanced Program

**Right angle drill/milling unit, LF=72**

| | | | |
|---|---|---|---|
| **ER-25 QF** | 420525010-65 | 1:2 | EC |
| | 0067725001 | | |
| **ER-25 QF** | 420525011-65 | 1:2 | IC 80 bar |
| | 0067725001 | | |
| **ER-32 QF** | 420532027-65 | 2:1 | EC |
| | 0067732000 | | |
| **ER-32 QF** | 420532028-65 | 2:1 | IC 80 bar |
| | 0067732000 | | |

**Right angle milling unit with combination mill arbor DIN 6358, LF=72**

| | | | |
|---|---|---|---|
| **Ø 22** | 410622001-65 | 1:1 | EC |
| | 00675000483 | | |
| **1"** | 410625001-65 | 1:1 | EC |
| | 00675000483 | | |

**Adjustable angle drill/milling unit**

| | | | |
|---|---|---|---|
| **ER 16** | 411010002-65 | 1:1 | EC |
| | 00675000902 | | |
| **ER 16** | 411010003-65 | 1:1 | IC 80 bar |
| | 00675000902 | | |
| **ER 11** | 411007002-65 | 1:2 | EC |
| | 00675000914 | | |
| **ER 11** | 411007003-65 | 1:2 | IC 80 bar |
| | 00675000914 | | |

**Straight drill/milling unit, both sides**

| | | | |
|---|---|---|---|
| **ER 25** | 413002001-65 | 1:1 | EC |
| | 00675000907 | | |

**Broaching unit for ID and OD**

| | | | |
|---|---|---|---|
| **TN765050** | 414532000-65 | 1:1 | EC |



© WTO GmbH * Subject to change without notice * www.wto.de

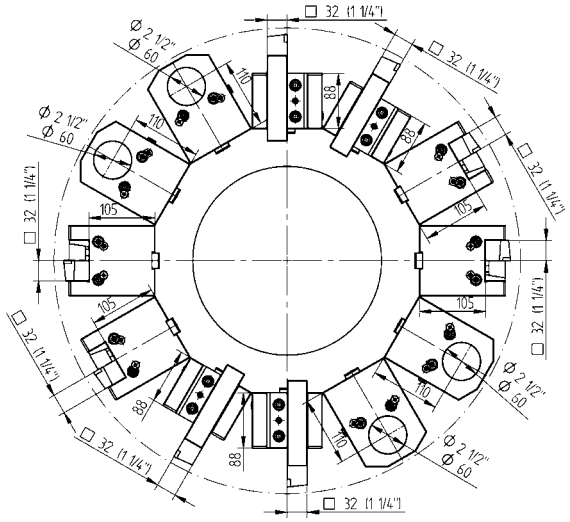


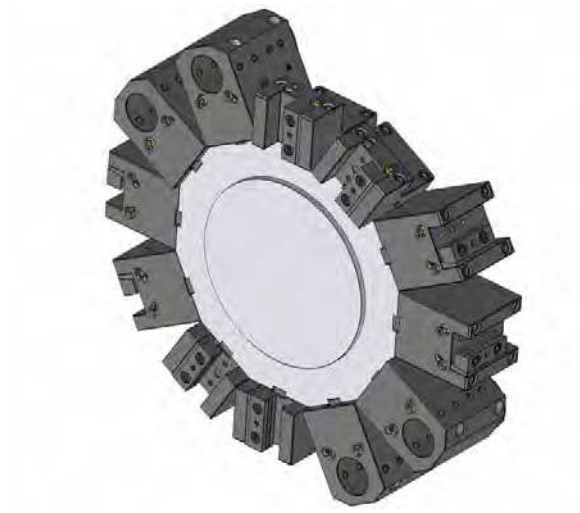

Static Toolholders - Standard Program

**OD cutting holder, long**

| | |
|---|---|
| **32** | 48-96334 |
| **1 1/4"** | 48-96335 |

**Face cutting holder, long**

| | |
|---|---|
| **32** | 48-96338 |
| **1 1/4"** | 48-96339 |

**Combination toolholder, LF=110**

| | | |
|---|---|---|
| **Ø 60** | 48-96777 | IC 80 bar |
| **Ø 2 1/2"** | 48-96778 | IC 80 bar |

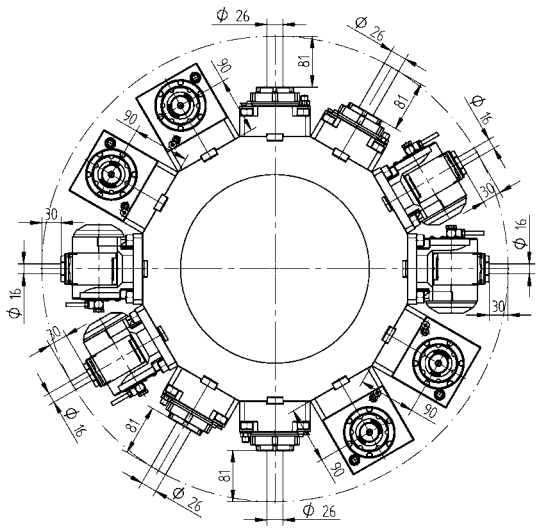


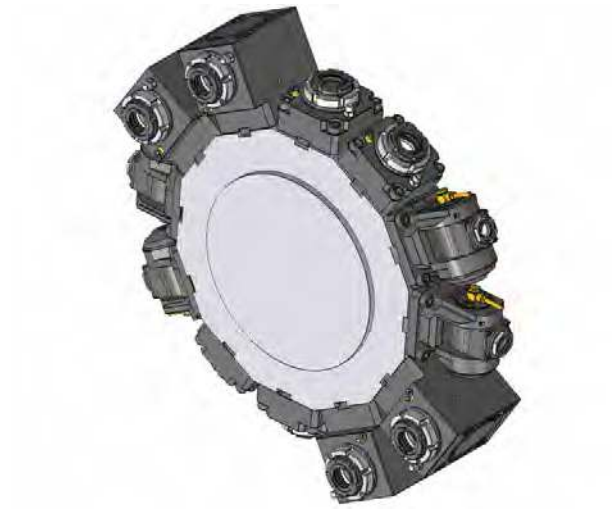

## Driven Toolholders - QuickFlex®

**OD drill/milling unit**

| | | | |
|---|---|---|---|
| **ER-40 QF** | 420140015-75 | 1:1 | EC |
| | 0067740000 | | |
| **ER-40 QF** | 420140016-75 | 1:1 | IC 80 bar |
| | 0067740000 | | |

**Face drill/milling unit, LF=90**

| | | | |
|---|---|---|---|
| **ER-40 QF** | 420540017-75 | 1:1 | EC |
| | 0067740000 | | |
| **ER-40 QF** | 420540018-75 | 1:1 | IC 80 bar |
| | 0067740000 | | |

## Driven Toolholders - Enhanced Program

**Face drill/milling unit, LF=90**

| | | | |
|---|---|---|---|
| **ER-32 QF** | 420532014-75 | 1:2 | EC |
| | 0067732001 | | |
| **ER-32 QF** | 420532015-75 | 1:2 | IC 80 bar |
| | 0067732001 | | |
| **ER-40 QF** | 420540029-75 | 2:1 | EC |
| | 0067740000 | | |
| **ER-40 QF** | 420540030-75 | 2:1 | IC 80 bar |
| | 0067740000 | | |

**Adjustable angle drill/milling unit**

| | | | |
|---|---|---|---|
| **ER 25** | 411016000-75 | 1:1 | EC |
| | 00675000934 | | |
| **ER 25** | 411016001-75 | 1:1 | IC 80 bar |
| | 00675000934 | | |
| **ER 16** | 411010002-75 | 1:2 | EC |
| | 00675000936 | | |
| **ER 16** | 411010003-75 | 1:2 | IC 80 bar |
| | 00675000936 | | |


© WTO GmbH * Subject to change without notice * www.wto.de

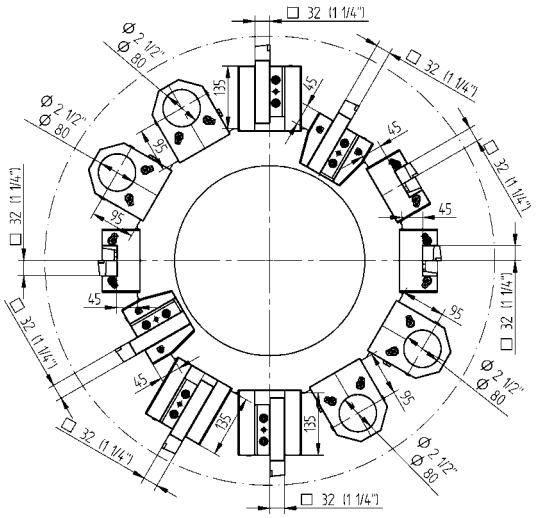


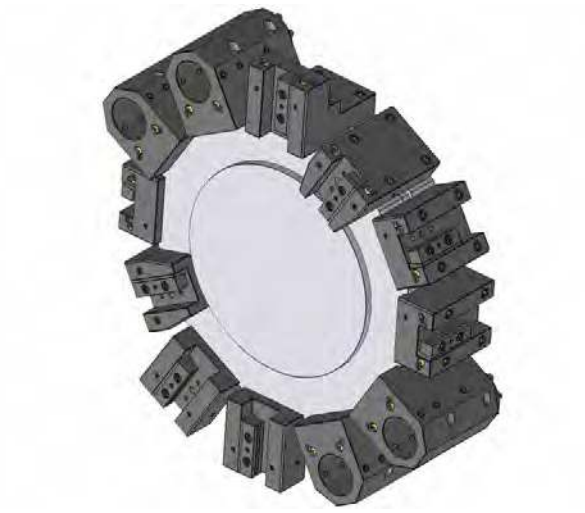

Static Toolholders - Standard Program

**OD cutting holder**

| | |
|---|---|
| **32** | 48-108332 |
| **1 1/4"** | 48-108903 |

**OD cutting holder, short**

| | |
|---|---|
| **32** | 48-95726 |
| **1 1/4"** | 48-95728 |

**Face cutting holder**

| | |
|---|---|
| **32** | 48-95730 |
| **1 1/4"** | 48-95731 |

**Combination toolholder**

| | | |
|---|---|---|
| **Ø 80** | 48-95732 | |
| **Ø 3"** | 48-95733 | IC 80 bar |

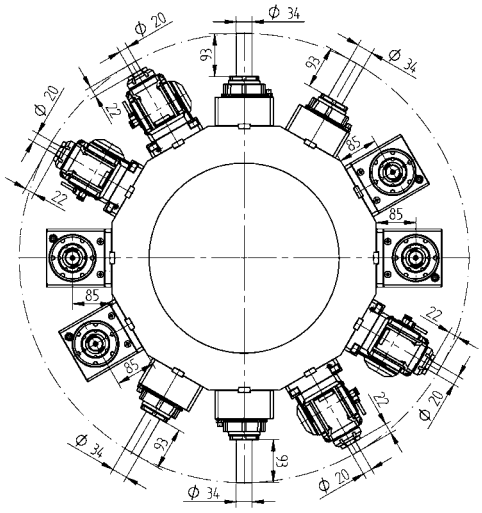

## Driven Toolholders - QuickFlex®

**OD drill/milling unit**

| | | | |
|---|---|---|---|
| **ER-50 QF** | 420150015-85 | 1:1 | EC |
| | 0067750000 | | |
| **ER-50 QF** | 420150016-85 | 1:1 | IC 80 bar |
| | 0067750000 | | |

**Face drill/milling unit, LF=85**

| | | | |
|---|---|---|---|
| **ER-50 QF** | 420550015-85 | 1:1 | EC |
| | 0067750000 | | |
| **ER-50 QF** | 420550016-85 | 1:1 | IC 80 bar |
| | 0067750000 | | |

## Driven Toolholders - Enhanced Program

**Face drill/milling unit, LF=85**

| | | | |
|---|---|---|---|
| **ER-40 QF** | 420540015-85 | 1:2 | EC |
| | 0067740001 | | |
| **ER-40 QF** | 420540016-85 | 1:2 | IC 80 bar |
| | 0067740001 | | |

**Adjustable angle drill/milling unit**

| | | | |
|---|---|---|---|
| **ER-32 QF** | 421032010-85 | 1:1 | EC |
| | 00675000976 | | |
| **ER-32 QF** | 421032011-85 | 1:1 | IC 80 bar |
| | 00675000976 | | |

**Gear hobbing unit**

| | | | |
|---|---|---|---|
| **Type C5-1** | 410900000-85 | 2:1 | EC |
| | 00675001008 | | |
| | 160022C51 Ø 22 | | |
| | 160027C51 Ø 27 | | |
| | 160032C51 Ø 32 | | |
| | 160019C51 Ø 3/4" | | |
| | 160025C51 Ø 1" | | |
| | 160031C51 Ø 1 1/4" | | |



© WTO GmbH * Subject to change without notice * www.wto.de

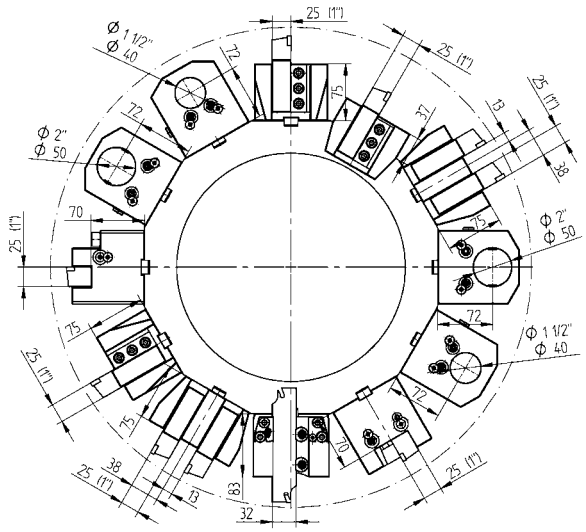


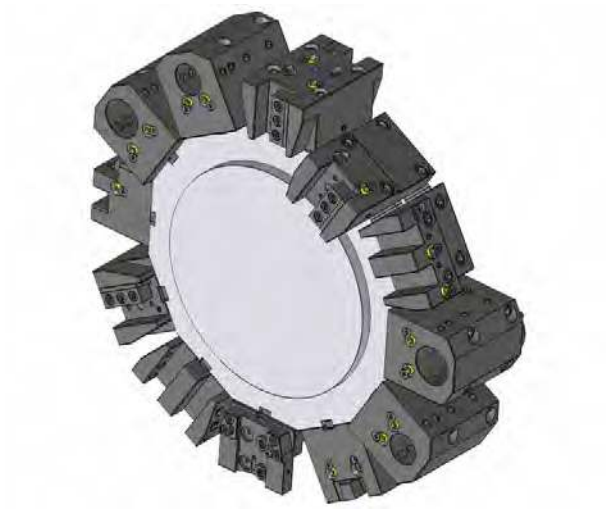

## Static Toolholders - Standard Program

**OD cutting holder, short**

| | |
|---|---|
| **25** | 48-86991 |
| **1"** | 48-86992 |

**OD cutting holder, short, HP-IC**

| | | |
|---|---|---|
| **25** | 48-86991-HP | IC 80 bar |
| **1"** | 48-86992-HP | IC 80 bar |

**OD cutting holder, both sides**

| | |
|---|---|
| **25** | 48-92438 |
| **1"** | 48-92472 |

**OD cutting holder, both sides, HP-IC**

| | | |
|---|---|---|
| **25** | 48-92438-HP | IC 80 bar |
| **1"** | 48-92472-HP | IC 80 bar |

**Face cutting holder**

| | |
|---|---|
| **25** | 48-86719 |
| **1"** | 48-86720 |

**Face cutting holder, HP-IC**

| | | |
|---|---|---|
| **25** | 48-109249-HP | IC 80 bar |
| **1"** | 48-109250-HP | IC 80 bar |

**Combination toolholder, LF=72**

| | | |
|---|---|---|
| **Ø 40** | 48-84375 | IC 80 bar |
| **Ø 1 1/2"** | 48-87077 | IC 80 bar |
| **Ø 50** | 48-107499 | IC 80 bar |
| **Ø 2"** | 48-107501 | IC 80 bar |

**Cover plate**

48-87089

## Static Toolholders - Enhanced Program

**OD cutting holder, double, Y axis**

| | |
|---|---|
| **25(1")** | 48-86103 |

**OD cutting holder, both sides, double, Y axis**

| | |
|---|---|
| **25(1")** | 48-86150 |

**Cut-off holder, adjustable**

| | |
|---|---|
| **SH 32** | 48-99060 |

**Cut-off holder, adjustable, HP-IC**

| | | |
|---|---|---|
| **SH 32** | 48-102256R | IC 80 bar |
| **SH 32** | 48-102256L | IC 80 bar |

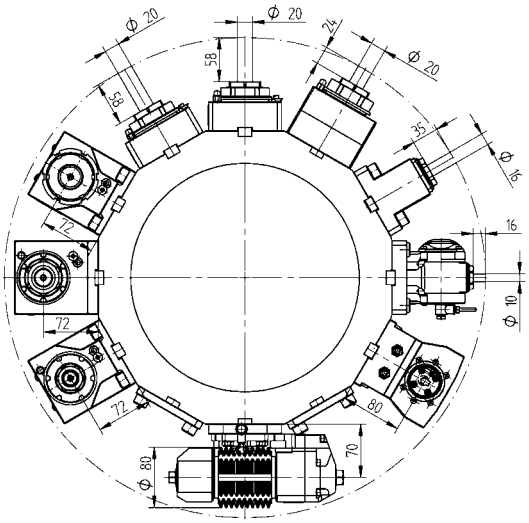

## Driven Toolholders - QuickFlex®

**Straight drill/milling unit**

| | | | |
|---|---|---|---|
| **ER-32 QF** | 420132015-65 | 1:1 | EC |
| | 0067732000 | | |
| **ER-32 QF** | 420132016-65 | 1:1 | IC 80 bar |
| | 0067732000 | | |

**Right angle drill/milling unit, LF=72**

| | | | |
|---|---|---|---|
| **ER-32 QF** | 420532015-65 | 1:1 | EC |
| | 0067732000 | | |
| **ER-32 QF** | 420532016-65 | 1:1 | IC 80 bar |
| | 0067732000 | | |

**Right angle drill/milling unit, both sides, LF=72**

| | | | |
|---|---|---|---|
| **ER-32 QF** | 420532017-65 | 1:1 | EC |
| | 0067732000 | | |

## Driven Toolholders - Enhanced Program

**Straight drill/milling unit**

| | | | |
|---|---|---|---|
| **ER 40** | 410126001-65 | 1:1 | EC |
| | 00675000079 | | |

**Straight milling unit with combination mill arbor DIN 6358**

| | | | |
|---|---|---|---|
| **Ø 22** | 410222002-65 | 1:1 | EC |
| | 00675000483 | | |
| **Ø 1"** | 410225002-65 | 1:1 | EC |
| | 00675000483 | | |

**Straight offset drill/milling unit**

| | | | |
|---|---|---|---|
| **ER-32 QF** | 420132037-65 | 1:1 | EC |
| | 0067732000 | | |
| **ER-32 QF** | 420132038-65 | 1:1 | IC 80 bar |
| | 0067732000 | | |
| **ER-25 QF** | 420125010-65 | 1:2 | EC |
| | 0067725001 | | |
| **ER-25 QF** | 420125011-65 | 1:2 | IC 80 bar |
| | 0067725001 | | |

**Face drill/milling unit for ER collets, LF=72**

| | | | |
|---|---|---|---|
| **ER 40** | 410526005-65 | 1:1 | EC |
| | 00675000781 | | |
| **ER 40** | 410526006-65 | 1:1 | IC 80 bar |
| | 00675000781 | | |


© WTO GmbH * Subject to change without notice * www.wto.de

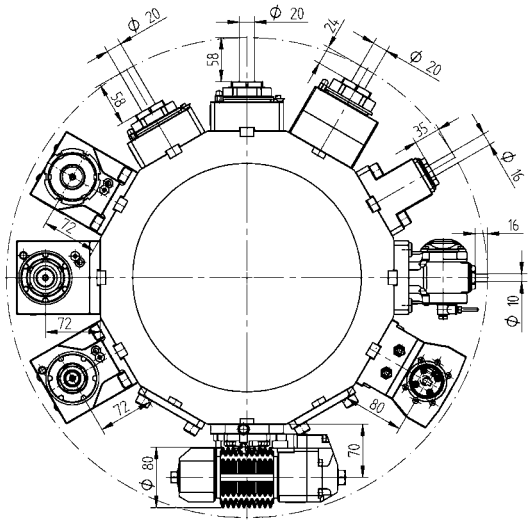

## Driven Toolholders - Enhanced Program

### Right angle drill/milling unit, LF=72

| | | | |
|---|---|---|---|
| **ER-25 QF** | 420525010-65 | 1:2 | EC |
| | 0067725001 | | |
| **ER-25 QF** | 420525011-65 | 1:2 | IC 80 bar |
| | 0067725001 | | |
| **ER-32 QF** | 420532027-65 | 2:1 | EC |
| | 0067732000 | | |
| **ER-32 QF** | 420532028-65 | 2:1 | IC 80 bar |
| | 0067732000 | | |

### Right angle milling unit with combination mill arbor DIN 6358, LF=72

| | | | |
|---|---|---|---|
| **Ø 22** | 410622001-65 | 1:1 | EC |
| | 00675000483 | | |
| **1"** | 410625001-65 | 1:1 | EC |
| | 00675000483 | | |

### Adjustable angle drill/milling unit

| | | | |
|---|---|---|---|
| **ER 16** | 411010002-65 | 1:1 | EC |
| | 00675000902 | | |
| **ER 16** | 411010003-65 | 1:1 | IC 80 bar |
| | 00675000902 | | |
| **ER 11** | 411007002-65 | 1:2 | EC |
| | 00675000914 | | |
| **ER 11** | 411007003-65 | 1:2 | IC 80 bar |
| | 00675000914 | | |

## Driven Toolholders - Enhanced Program

### Gear hobbing unit

| | | | |
|---|---|---|---|
| **Type 16-1** | 411500003-65 | 1:1 | EC |
| **Type 16-1** | 411500002-65 | 2:1 | EC |
| | 00675000927 | | |
| | 160016161 Ø 16 | | |
| | 160022161 Ø 22 | | |
| | 160027161 Ø 27 | | |
| | 160015161 Ø 5/8" | | |
| | 160019161 Ø 3/4" | | |
| | 160025161 Ø 1" | | |
| | 96394 | | |

### Straight drill/milling unit, both sides

| | | | |
|---|---|---|---|
| **ER 25** | 413002001-65 | 1:1 | EC |
| | 00675000907 | | |

### Broaching unit for ID and OD

| | | | |
|---|---|---|---|
| **TN765050** | 414532001-65 | 1:1 | EC |

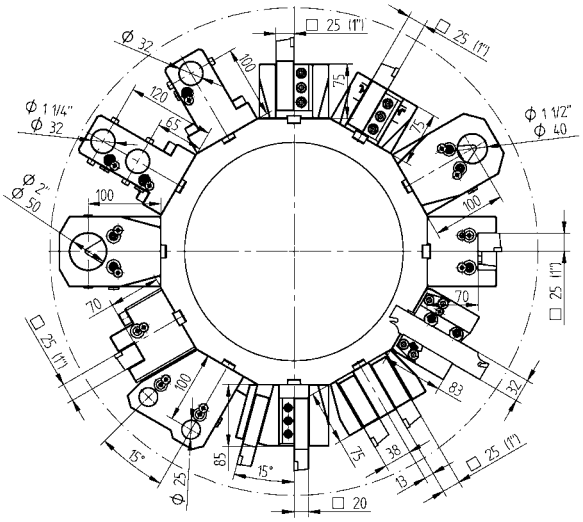


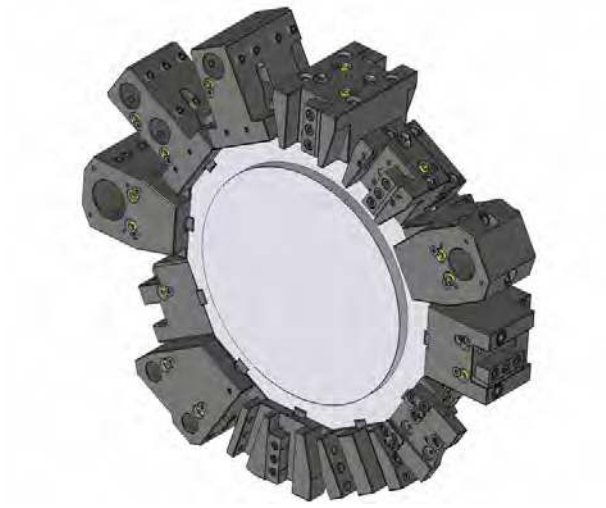

## Static Toolholders - Standard Program

**OD cutting holder**

| | | |
|---|---|---|
| **25** | 48-92428 | |
| **1"** | 48-92466 | |

**OD cutting holder, HP-IC**

| | | |
|---|---|---|
| **25** | 48-92428-HP | IC 80 bar |
| **1"** | 48-92466-HP | IC 80 bar |

**OD cutting holder, both sides**

| | |
|---|---|
| **25** | 48-92438 |
| **1"** | 48-92472 |

**OD cutting holder, both sides, HP-IC**

| | | |
|---|---|---|
| **25** | 48-92438-HP | IC 80 bar |
| **1"** | 48-92472-HP | IC 80 bar |

**Face cutting holder**

| | |
|---|---|
| **25** | 48-86719 |
| **1"** | 48-86720 |

**Face cutting holder, HP-IC**

| | | |
|---|---|---|
| **25** | 48-109249-HP | IC 80 bar |
| **1"** | 48-109250-HP | IC 80 bar |

**Combination toolholder, LF=100**

| | | |
|---|---|---|
| **Ø 40** | 48-92397 | IC 80 bar |
| | 241140020 ER32 | |
| | 241140026 ER40 | |
| **Ø 50** | 48-92467 | IC 80 bar |
| **Ø 1 1/2"** | 48-92468 | IC 80 bar |
| | 2411150020 ER32 | |
| **Ø 2"** | 48-92469 | IC 80 bar |

## Static Toolholders - Standard Program

**Boring bar holder, both sides**

| | |
|---|---|
| **Ø 32** | 48-101033 |

**Boring bar holder, double**

| | |
|---|---|
| **Ø 32** | 48-84524 |
| **Ø 1 1/4"** | 48-86905 |

**Cover plate**

48-87089



© WTO GmbH * Subject to change without notice * www.wto.de

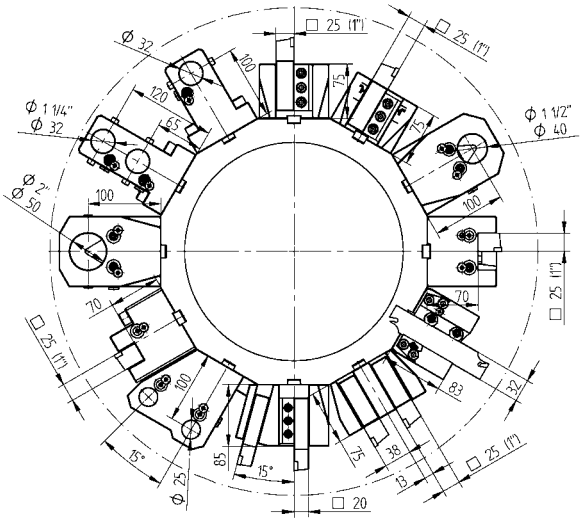


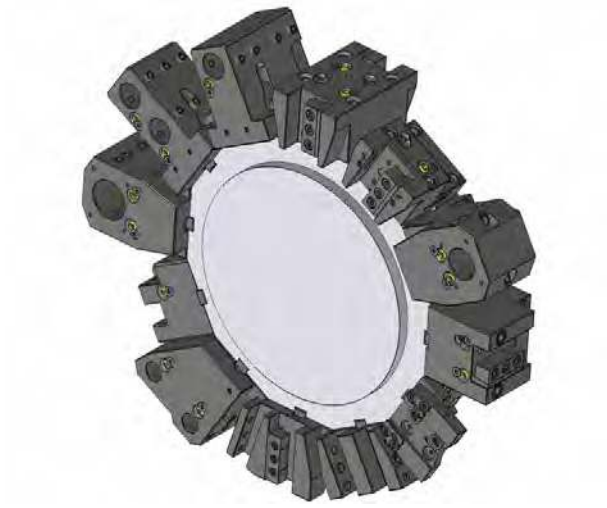

## Static Toolholders - Enhanced Program

**OD cutting holder, double, 24 station**

| | |
|---|---|
| **20** | 48-92089 |

**OD cutting holder, both sides, double, 24 station**

| | |
|---|---|
| **20** | 48-92091 |

**OD cutting holder, double, Y axis**

| | |
|---|---|
| **25(1")** | 48-86103 |

**OD cutting holder, both sides, double, Y axis**

| | |
|---|---|
| **25(1")** | 48-86150 |

**Cut-off holder, adjustable**

| | |
|---|---|
| **SH 32** | 48-99060 |

**Cut-off holder, adjustable, long**

| | |
|---|---|
| **SH 32** | 48-100084 |

**Cut-off holder, adjustable, HP-IC**

| | | |
|---|---|---|
| **SH 32** | 48-102256R | IC 80 bar |
| **SH 32** | 48-102256L | IC 80 bar |

**Cut-off holder, adjustable, long, HP-IC**

| | | |
|---|---|---|
| **SH 32** | 48-100082R | IC 80 bar |
| **SH 32** | 48-100082L | IC 80 bar |

## Static Toolholders - Enhanced Program

**Boring bar holder, double, 24 station**

| | |
|---|---|
| **Ø 25** | 48-92102 |

**Combination toolholder, both sides, double, 24 station**

| | |
|---|---|
| **Ø 25** | 48-109092 |
| **Ø 1"** | 48-108887 |

**Boring bar holder, double, both sides**

| | |
|---|---|
| **Ø 32** | 48-86160 |
| **Ø 1 1/4"** | 48-86274 |

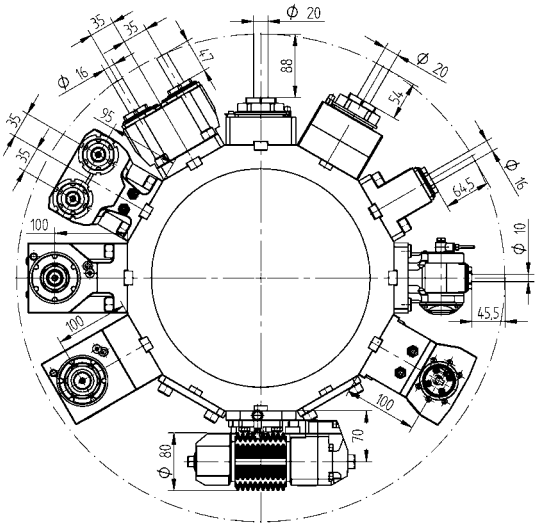

## Driven Toolholders - QuickFlex®

**Straight drill/milling unit**

| | | | |
|---|---|---|---|
| **ER-32 QF** | 420132015-65 | 1:1 | EC |
| | 0067732000 | | |
| **ER-32 QF** | 420132016-65 | 1:1 | IC 80 bar |
| | 0067732000 | | |

**Right angle drill/milling unit, LF=100**

| | | | |
|---|---|---|---|
| **ER-32 QF** | 420532018-65 | 1:1 | EC |
| | 0067732000 | | |
| **ER-32 QF** | 420532019-65 | 1:1 | IC 80 bar |
| | 0067732000 | | |

**Right angle drill/milling unit, both sides, LF=100**

| | | | |
|---|---|---|---|
| **ER-32 QF** | 420532020-65 | 1:1 | EC |
| | 0067732000 | | |

## Driven Toolholders - Enhanced Program

**Straight drill/milling unit**

| | | | |
|---|---|---|---|
| **ER 40** | 410126001-65 | 1:1 | EC |
| | 00675000079 | | |

**Straight milling unit with combination mill arbor DIN 6358**

| | | | |
|---|---|---|---|
| **Ø 22** | 410222002-65 | 1:1 | EC |
| | 00675000483 | | |
| **Ø 1"** | 410225002-65 | 1:1 | EC |
| | 00675000483 | | |

**Straight offset drill/milling unit**

| | | | |
|---|---|---|---|
| **ER-32 QF** | 420132037-65 | 1:1 | EC |
| | 0067732000 | | |
| **ER-32 QF** | 420132038-65 | 1:1 | IC 80 bar |
| | 0067732000 | | |
| **ER-25 QF** | 420125010-65 | 1:2 | EC |
| | 0067725001 | | |
| **ER-25 QF** | 420125011-65 | 1:2 | IC 80 bar |
| | 0067725001 | | |

**Right angle drill/milling unit, LF=100**

| | | | |
|---|---|---|---|
| **ER 40** | 410526007-65 | 1:1 | EC |
| | 00675000079 | | |
| **ER 40** | 410526008-65 | 1:1 | IC 80 bar |
| | 00675000079 | | |


© WTO GmbH * Subject to change without notice * www.wto.de

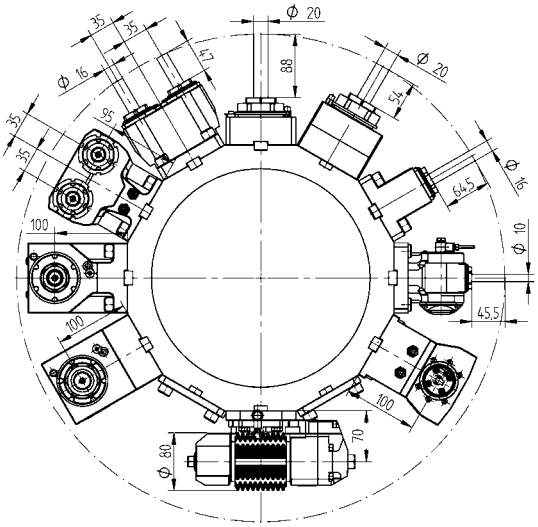

## Driven Toolholders - Enhanced Program

**Right angle drill/milling unit, LF=100**

| | | | |
|---|---|---|---|
| **ER-25 QF** | 420525012-65 | 1:2 | EC |
| | 0067725001 | | |
| **ER-25 QF** | 420525013-65 | 1:2 | IC 80 bar |
| | 0067725001 | | |
| **ER-32 QF** | 420532029-65 | 2:1 | EC |
| | 0067732000 | | |
| **ER-32 QF** | 420532030-65 | 2:1 | IC 80 bar |
| | 0067732000 | | |

**Right angle milling unit with combination mill arbor DIN 6358, LF=100**

| | | | |
|---|---|---|---|
| **Ø 22** | 410622002-65 | 1:1 | EC |
| | 00675000483 | | |
| **1"** | 410625002-65 | 1:1 | EC |
| | 00675000483 | | |

**Adjustable angle drill/milling unit**

| | | | |
|---|---|---|---|
| **ER 16** | 411010002-65 | 1:1 | EC |
| | 00675000902 | | |
| **ER 16** | 411010003-65 | 1:1 | IC 80 bar |
| | 00675000902 | | |
| **ER 11** | 411007002-65 | 1:2 | EC |
| | 00675000914 | | |
| **ER 11** | 411007003-65 | 1:2 | IC 80 bar |
| | 00675000914 | | |

## Driven Toolholders - Enhanced Program

**Gear hobbing unit**

| | | | |
|---|---|---|---|
| **Type 16-1** | 411500003-65 | 1:1 | EC |
| **Type 16-1** | 411500002-65 | 2:1 | EC |
| | 00675000927 | | |
| | 160016161 Ø 16 | | |
| | 160022161 Ø 22 | | |
| | 160027161 Ø 27 | | |
| | 160015161 Ø 5/8" | | |
| | 160019161 Ø 3/4" | | |
| | 160025161 Ø 1" | | |
| | 96394 | | |

**Straight drill/milling unit, both sides**

| | | | |
|---|---|---|---|
| **ER 25** | 413002001-65 | 1:1 | EC |
| | 00675000907 | | |

**Straight drill/milling unit, double, Y axis**

| | | | |
|---|---|---|---|
| **ER 25** | 413002004-65 | 1:1 | EC |
| | 00675000907 | | |

**2-spindle - Right angle drill/milling unit, Y axis**

| | | | |
|---|---|---|---|
| **ER 25** | 413502006-65 | 1:1 | EC |
| | 00675000915 | | |
| **ER 25** | 413502007-65 | 1:1 | IC 80 bar |
| | 00675000915 | | |

**2-spindle - Right angle drill/milling unit, both sides, Y axis**

| | | | |
|---|---|---|---|
| **ER 25** | 413502008-65 | 1:1 | EC |
| | 00675000915 | | |

**Broaching unit for ID and OD**

| | | | |
|---|---|---|---|
| **TN765050** | 414532000-65 | 1:1 | EC |

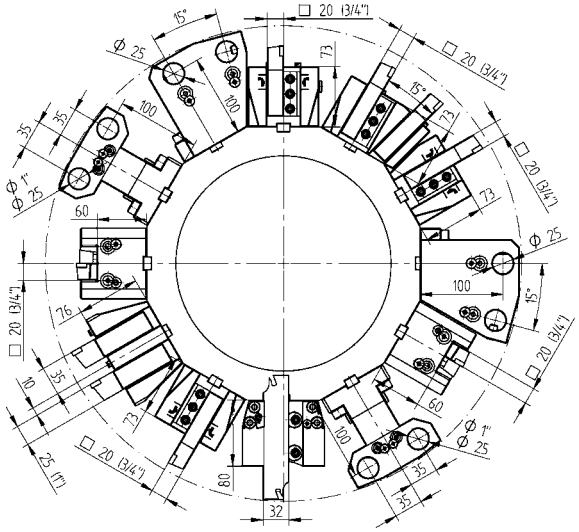

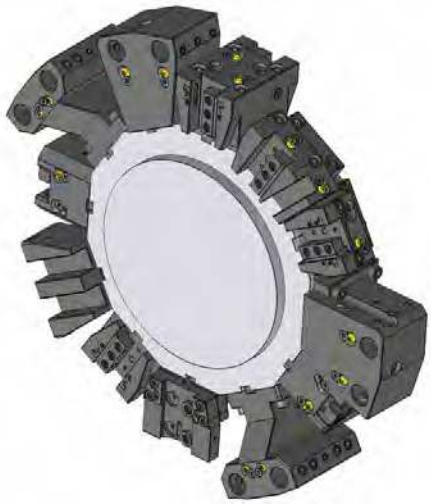

## Static Toolholders - Standard Program

**OD cutting holder**

| | | |
|---|---|---|
| **20** | 48-92036 | |
| **3/4"** | 48-92037 | |

**OD cutting holder, HP-IC**

| | | |
|---|---|---|
| **20** | 48-92036-HP | IC 80 bar |
| **3/4"** | 48-92037-HP | IC 80 bar |

**OD cutting holder, both sides**

| | |
|---|---|
| **20** | 48-92038 |
| **3/4"** | 48-92039 |

**OD cutting holder, both sides, HP-IC**

| | | |
|---|---|---|
| **20** | 48-92038-HP | IC 80 bar |
| **3/4"** | 48-92039-HP | IC 80 bar |

**Face cutting holder**

| | |
|---|---|
| **20** | 48-92045 |
| **3/4"** | 48-92046 |

**Face cutting holder, HP-IC**

| | | |
|---|---|---|
| **20** | 48-92045-HP | IC 80 bar |
| **3/4"** | 48-92046-HP | IC 80 bar |

**Combination toolholder, universal, LF=95**

| | | |
|---|---|---|
| **Ø 32** | 48-109277 | IC 80 bar |
| | 241132020 ER32 | |
| | 241132016 ER25 | |
| **Ø 1 1/4"** | 48-109278 | IC 80 bar |
| | 2411125020 ER32 | |

## Static Toolholders - Enhanced Program

**OD cutting holder, double, Y axis**

| | |
|---|---|
| **25(1")** | 48-87140 |

**OD cutting holder, double, 24 station**

| | |
|---|---|
| **20** | 48-87674 |

**OD cutting holder, both sides, double, Y axis**

| | |
|---|---|
| **25(1")** | 48-87141 |

**OD cutting holder, both sides, double, 24 station**

| | |
|---|---|
| **20** | 48-92980 |

**Cut-off holder, adjustable**

| | |
|---|---|
| **SH 32** | 48-103287 |

**Cut-off holder, adjustable, HP-IC**

| | | |
|---|---|---|
| **SH 32** | 48-110160R | IC 80 bar |
| **SH 32** | 48-110160L | IC 80 bar |

**Boring bar holder, both sides, double, Y axis**

| | |
|---|---|
| **Ø 25** | 48-87147 |
| **Ø 1"** | 48-87148 |

**Boring bar holder, double, 24 station**

| | |
|---|---|
| **Ø 25** | 48-87678 |



© WTO GmbH * Subject to change without notice * www.wto.de

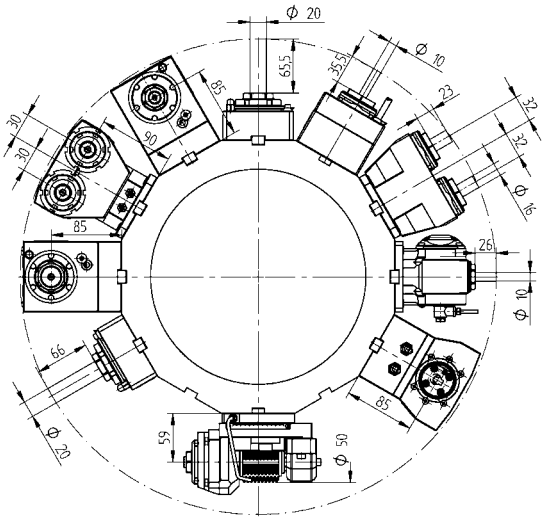

## Driven Toolholders - QuickFlex®

**Straight drill/milling unit**

| | | | |
|---|---|---|---|
| **ER-25 QF** | 420125015-55 | 1:1 | EC |
| | 0067725000 | | |
| **ER-25 QF** | 420125016-55 | 1:1 | IC 80 bar |
| | 0067725000 | | |

**Right angle drill/milling unit, LF=85**

| | | | |
|---|---|---|---|
| **ER-25 QF** | 420525018-55 | 1:1 | EC |
| | 0067725000 | | |
| **ER-25 QF** | 420525019-55 | 1:1 | IC 80 bar |
| | 0067725000 | | |

**Right angle drill/milling unit, both sides, LF=85**

| | | | |
|---|---|---|---|
| **ER-25 QF** | 420525020-55 | 1:1 | EC |
| | 0067725000 | | |

## Driven Toolholders - Enhanced Program

**Straight drill/milling unit**

| | | | |
|---|---|---|---|
| **ER 32** | 410120010-55 | 1:1 | EC |
| | 0067725000 | | |
| **ER 32** | 410120011-55 | 1:1 | IC 80 bar |
| | 0067725000 | | |

**Straight milling unit with combination mill arbor DIN 6358**

| | | | |
|---|---|---|---|
| **Ø 22** | 410222004-55 | 1:1 | EC |
| | 00675000483 | | |
| **Ø 3/4"** | 410219002-55 | 1:1 | EC |
| | 00675000483 | | |

**Straight offset drill/milling unit**

| | | | |
|---|---|---|---|
| **ER 25** | 410116029-55 | 1:1 | EC |
| | 00675000932 | | |
| **ER 25** | 410116030-55 | 1:1 | IC 80 bar |
| | 00675000932 | | |
| **ER 20** | 410113009-55 | 1:2 | EC |
| | 00675000939 | | |
| **ER 20** | 410113010-55 | 1:2 | IC 80 bar |
| | 00675000939 | | |
| **ER 16** | 410410004-55 | 1:3 | EC |
| | 00675000937 | | |
| **ER 16** | 410410005-55 | 1:3 | IC 80 bar |
| | 00675000937 | | |

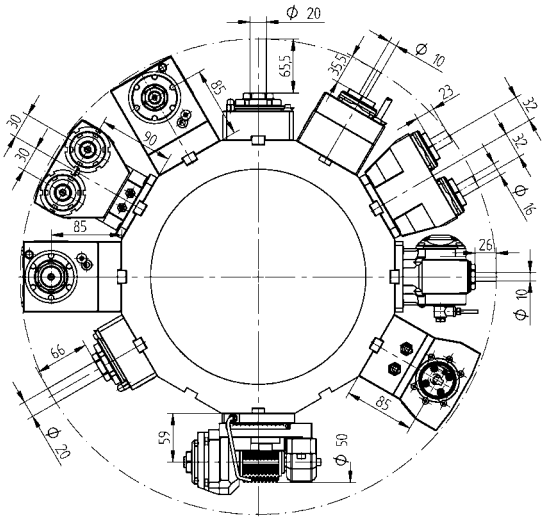

## Driven Toolholders - Enhanced Program

### Right angle drill/milling unit, LF=85

| | | | |
|---|---|---|---|
| **ER 32** | 410520030-55 | 1:1 | EC |
| | 0067725000 | | |
| **ER 32** | 410520031-55 | 1:1 | IC 80 bar |
| | 0067725000 | | |
| **ER-20 QF** | 420520014-55 | 1:2 | EC |
| | 0067720001 | | |
| **ER-20 QF** | 420520015-55 | 1:2 | IC 80 bar |
| | 0067720001 | | |
| **ER 16** | 410810020-55 | 1:3 | EC |
| | 00675000841 | | |
| **ER 16** | 410810021-55 | 1:3 | IC 80 bar |
| | 00675000841 | | |
| **ER-25 QF** | 420525032-55 | 2:1 | EC |
| | 0067725000 | | |
| **ER-25 QF** | 420525033-55 | 2:1 | IC 80 bar |
| | 0067725000 | | |

### Right angle milling unit with combination mill arbor DIN 6358, LF=85

| | | | |
|---|---|---|---|
| **Ø 22** | 410622011-55 | 1:1 | EC |
| | 00675000483 | | |
| **Ø 3/4"** | 410619006-55 | 1:1 | EC |
| | 00675000483 | | |

### Adjustable angle drill/milling unit

| | | | |
|---|---|---|---|
| **ER 16** | 411010005-55 | 1:1 | EC |
| | 00675000902 | | |
| **ER 16** | 411010006-55 | 1:1 | IC 80 bar |
| | 00675000902 | | |
| **ER 11** | 411007007-55 | 1:2 | EC |
| | 00675000914 | | |
| **ER 11** | 411007008-55 | 1:2 | IC 80 bar |
| | 00675000914 | | |

## Driven Toolholders - Enhanced Program

### Gear hobbing unit

| | | | |
|---|---|---|---|
| **Type 15-2** | 410900002-55 | 1:1 | EC |
| | 00675001015 | | |
| | 160008152 Ø 8 | | |
| | 160010152 Ø 10 | | |
| | 160013152 Ø 13 | | |
| | 160016152 Ø 16 | | |
| | 160022152 Ø 22 | | |
| | 160015152 Ø 5/8" | | |
| | 160019152 Ø 3/4" | | |
| | 96394 | | |

### Straight drill/milling unit, double, Y axis

| | | | |
|---|---|---|---|
| **ER 25** | 413002004-55 | 1:1 | EC |
| | 00675000970 | | |
| **ER 25** | 413002003-55 | 1:1 | IC 80 bar |
| | 00675000970 | | |

### 2-spindle - Right angle drill/milling unit, Y axis

| | | | |
|---|---|---|---|
| **ER 25** | 413502007-55 | 1:1 | EC |
| | 00675000915 | | |
| **ER 25** | 413502008-55 | 1:1 | IC 80 bar |
| | 00675000915 | | |

### 2-spindle - Right angle drill/milling unit, both sides, Y axis

| | | | |
|---|---|---|---|
| **ER 25** | 413502006-55 | 1:1 | EC |
| | 00675000915 | | |

### Broaching unit for ID and OD

| | | | |
|---|---|---|---|
| **TN765050** | 414532000-55 | 1:1 | EC |



© WTO GmbH * Subject to change without notice * www.wto.de

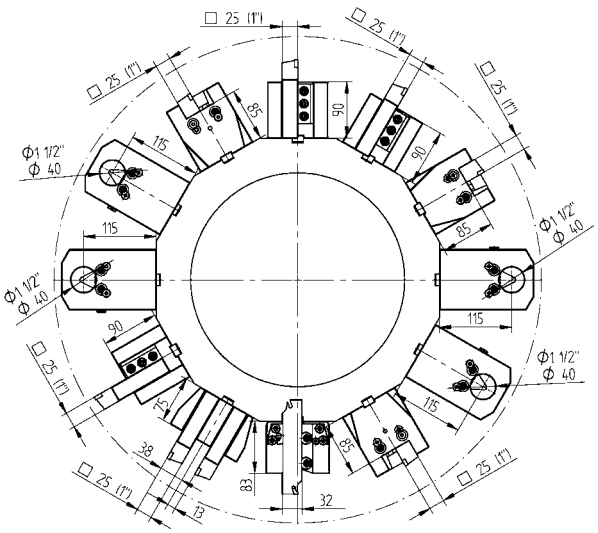


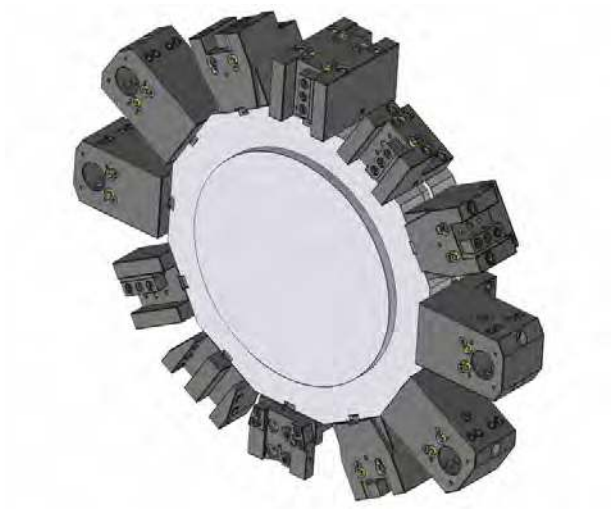

## Static Toolholders - Standard Program

**OD cutting holder, long**

| | |
|---|---|
| **25** | 48-86711 |
| **1"** | 48-86712 |

**OD cutting holder, both sides, long**

| | |
|---|---|
| **25** | 48-84523 |
| **1"** | 48-86718 |

**Face cutting holder, long**

| | |
|---|---|
| **25** | 48-92958 |
| **1"** | 48-92959 |

**Combination toolholder, LF=115**

| | | |
|---|---|---|
| **Ø 40** | 48-86623 | IC 80 bar |
| | 241140020 ER32 | |
| | 241140026 ER40 | |
| **Ø 1 1/2"** | 48-86624 | IC 80 bar |
| | 2411150020 ER32 | |

**Cover plate**

48-87089

## Static Toolholders - Enhanced Program

**OD cutting holder, double, Y axis**

| | |
|---|---|
| **25(1")** | 48-86103 |

**OD cutting holder, both sides, double, Y axis**

| | |
|---|---|
| **25(1")** | 48-86150 |

**Cut-off holder, adjustable**

| | |
|---|---|
| **SH 32** | 48-99060 |

**Cut-off holder, adjustable, long**

| | |
|---|---|
| **SH 32** | 48-100084 |

**Cut-off holder, adjustable, HP-IC**

| | | |
|---|---|---|
| **SH 32** | 48-102256R | IC 80 bar |
| **SH 32** | 48-102256L | IC 80 bar |

**Cut-off holder, adjustable, long, HP-IC**

| | | |
|---|---|---|
| **SH 32** | 48-100082R | IC 80 bar |
| **SH 32** | 48-100082L | IC 80 bar |

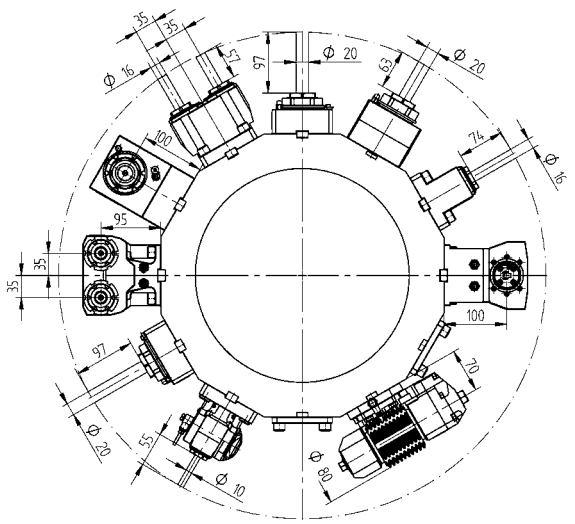

## Driven Toolholders - QuickFlex®

**Straight drill/milling unit**

| | | | |
|---|---|---|---|
| **ER-32 QF** | 420132015-65 | 1:1 | EC |
| | 0067732000 | | |
| **ER-32 QF** | 420132016-65 | 1:1 | IC 80 bar |
| | 0067732000 | | |

**Right angle drill/milling unit, LF=100**

| | | | |
|---|---|---|---|
| **ER-32 QF** | 420532018-65 | 1:1 | EC |
| | 0067732000 | | |
| **ER-32 QF** | 420532019-65 | 1:1 | IC 80 bar |
| | 0067732000 | | |

**Right angle drill/milling unit, both sides, LF=100**

| | | | |
|---|---|---|---|
| **ER-32 QF** | 420532020-65 | 1:1 | EC |
| | 0067732000 | | |

## Driven Toolholders - Enhanced Program

**Straight drill/milling unit**

| | | | |
|---|---|---|---|
| **ER 40** | 410126001-65 | 1:1 | EC |
| | 00675000079 | | |

**Straight milling unit with combination mill arbor DIN 6358**

| | | | |
|---|---|---|---|
| **Ø 22** | 410222002-65 | 1:1 | EC |
| | 00675000483 | | |
| **Ø 1"** | 410225002-65 | 1:1 | EC |
| | 00675000483 | | |

**Straight offset drill/milling unit**

| | | | |
|---|---|---|---|
| **ER-32 QF** | 420132037-65 | 1:1 | EC |
| | 0067732000 | | |
| **ER-32 QF** | 420132038-65 | 1:1 | IC 80 bar |
| | 0067732000 | | |
| **ER-25 QF** | 420125010-65 | 1:2 | EC |
| | 0067725001 | | |
| **ER-25 QF** | 420125011-65 | 1:2 | IC 80 bar |
| | 0067725001 | | |

**Right angle drill/milling unit, LF=100**

| | | | |
|---|---|---|---|
| **ER 40** | 410526007-65 | 1:1 | EC |
| | 00675000079 | | |
| **ER 40** | 410526008-65 | 1:1 | IC 80 bar |
| | 00675000079 | | |


© WTO GmbH * Subject to change without notice * www.wto.de

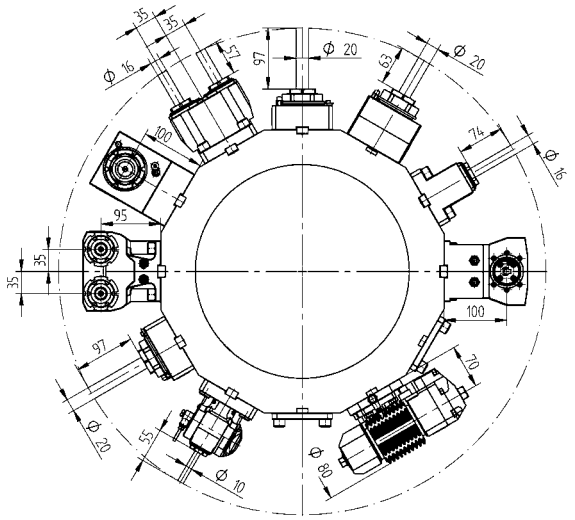

## Driven Toolholders - Enhanced Program

**Right angle drill/milling unit, LF=100**

| | | | |
|---|---|---|---|
| **ER-25 QF** | 420525012-65 | 1:2 | EC |
| | 0067725001 | | |
| **ER-25 QF** | 420525013-65 | 1:2 | IC 80 bar |
| | 0067725001 | | |
| **ER-32 QF** | 420532029-65 | 2:1 | EC |
| | 0067732000 | | |
| **ER-32 QF** | 420532030-65 | 2:1 | IC 80 bar |
| | 0067732000 | | |

**Right angle milling unit with combination mill arbor DIN 6358, LF=100**

| | | | |
|---|---|---|---|
| **Ø 22** | 410622002-65 | 1:1 | EC |
| | 00675000483 | | |
| **1"** | 410625002-65 | 1:1 | EC |
| | 00675000483 | | |

**Adjustable angle drill/milling unit**

| | | | |
|---|---|---|---|
| **ER 16** | 411010002-65 | 1:1 | EC |
| | 00675000902 | | |
| **ER 16** | 411010003-65 | 1:1 | IC 80 bar |
| | 00675000902 | | |
| **ER 11** | 411007002-65 | 1:2 | EC |
| | 00675000914 | | |
| **ER 11** | 411007003-65 | 1:2 | IC 80 bar |
| | 00675000914 | | |

## Driven Toolholders - Enhanced Program

**Gear hobbing unit**

| | | | |
|---|---|---|---|
| **Type 16-1** | 411500003-65 | 1:1 | EC |
| **Type 16-1** | 411500002-65 | 2:1 | EC |
| | 00675000927 | | |
| | 160016161 Ø 16 | | |
| | 160022161 Ø 22 | | |
| | 160027161 Ø 27 | | |
| | 160015161 Ø 5/8" | | |
| | 160019161 Ø 3/4" | | |
| | 160025161 Ø 1" | | |
| | 96394 | | |

**Straight drill/milling unit, both sides**

| | | | |
|---|---|---|---|
| **ER 25** | 413002001-65 | 1:1 | EC |
| | 00675000907 | | |

**Straight drill/milling unit, double, Y axis**

| | | | |
|---|---|---|---|
| **ER 25** | 413002004-65 | 1:1 | EC |
| | 00675000907 | | |

**2-spindle - Right angle drill/milling unit, Y axis**

| | | | |
|---|---|---|---|
| **ER 25** | 413502006-65 | 1:1 | EC |
| | 00675000915 | | |
| **ER 25** | 413502007-65 | 1:1 | IC 80 bar |
| | 00675000915 | | |

**2-spindle - Right angle drill/milling unit, both sides, Y axis**

| | | | |
|---|---|---|---|
| **ER 25** | 413502008-65 | 1:1 | EC |
| | 00675000915 | | |

**Broaching unit for ID and OD**

| | | | |
|---|---|---|---|
| **TN765050** | 414532000-65 | 1:1 | EC |

## Standard reduction sleeves - cylindrical

**Reduction sleeve Ø 20**

| | |
|---|---|
| 240020006 | ø 6 |
| 240020008 | ø 8 |
| 240020010 | ø 10 |
| 240020012 | ø 12 |
| 240020014 | ø 14 |
| 240020016 | ø 16 |

**Reduction sleeve Ø 25**

| | |
|---|---|
| 240025006 | ø 6 |
| 240025008 | ø 8 |
| 240025010 | ø 10 |
| 240025012 | ø 12 |
| 240025016 | ø 16 |
| 240025020 | ø 20 |

**Reduction sleeve Ø 32**

| | |
|---|---|
| 240032006 | ø 6 |
| 240032008 | ø 8 |
| 240032010 | ø 10 |
| 240032012 | ø 12 |
| 240032016 | ø 16 |
| 240032020 | ø 20 |
| 240032025 | ø 25 |

**Reduction sleeve Ø 40**

| | |
|---|---|
| 240040006 | ø 6 |
| 240040008 | ø 8 |
| 240040010 | ø 10 |
| 240040012 | ø 12 |
| 240040014 | ø 14 |
| 240040016 | ø 16 |
| 240040020 | ø 20 |
| 240040025 | ø 25 |
| 240040032 | ø 32 |

**Reduction sleeve Ø 50**

| | |
|---|---|
| 240050010 | ø 10 |
| 240050012 | ø 12 |
| 240050016 | ø 16 |
| 240050020 | ø 20 |
| 240050025 | ø 25 |
| 240050032 | ø 32 |
| 240050040 | ø 40 |

**Reduction sleeve Ø 60**

| | |
|---|---|
| 240060012 | ø 12 |
| 240060016 | ø 16 |
| 240060020 | ø 20 |
| 240060025 | ø 25 |
| 240060032 | ø 32 |
| 240060040 | ø 40 |
| 240060050 | ø 50 |

## Standard reduction sleeves - cylindrical

**Reduction sleeve Ø 80**

| | |
|---|---|
| 240080020 | ø 20 |
| 240080025 | ø 25 |
| 240080032 | ø 32 |
| 240080040 | ø 40 |
| 240080050 | ø 50 |
| 240080060 | ø 60 |

**Reduction sleeve Ø 1"**

| | |
|---|---|
| 2400100025 | ø 1/4" |
| 2400100031 | ø 5/16" |
| 2400100038 | ø 3/8" |
| 2400100050 | ø 1/2" |
| 2400100063 | ø 5/8" |
| 2400100075 | ø 3/4" |

**Reduction sleeve Ø 1 1/4"**

| | |
|---|---|
| 2400125038 | ø 3/8" |
| 2400125050 | ø 1/2" |
| 2400125063 | ø 5/8" |
| 2400125075 | ø 3/4" |
| 2400125088 | ø 7/8" |
| 2400125100 | ø 1" |

**Reduction sleeve Ø 1 1/2"**

| | |
|---|---|
| 2400150038 | ø 3/8" |
| 2400150050 | ø 1/2" |
| 2400150063 | ø 5/8" |
| 2400150075 | ø 3/4" |
| 2400150088 | ø 7/8" |
| 2400150100 | ø 1" |
| 2400150125 | ø 1 1/4" |

**Reduction sleeve Ø 2"**

| | |
|---|---|
| 2400200050 | ø 1/2" |
| 2400200063 | ø 5/8" |
| 2400200088 | ø 7/8" |
| 2400200100 | ø 1" |
| 2400200125 | ø 1 1/4" |
| 2400200150 | ø 1 1/2" |
| 2400200175 | ø 1 3/4" |

**Reduction sleeve Ø 3"**

| | |
|---|---|
| 2400300075 | ø 3/4" |
| 2400300100 | ø 1" |
| 2400300125 | ø 1 1/4" |
| 2400300150 | ø 1 1/2" |
| 2400300200 | ø 2" |
| 2400300250 | ø 2 1/2" |



© WTO GmbH * Subject to change without notice * www.wto.de

## Standard reduction sleeves - cylindrical, with slot

**Reduction sleeve Ø 40**

| | |
|---|---|
| 240140010 | ø 10 |
| 240140012 | ø 12 |
| 240140015 | ø 15 |
| 240140016 | ø 16 |
| 240140020 | ø 20 |
| 240140025 | ø 25 |
| 240140032 | ø 32 |

## Standard reduction sleeves - morse taper

**Reduction sleeve Ø 32**

| | |
|---|---|
| 240532001 | MT 1 |
| 240532002 | MT 2 |
| 240532003 | MT 3 |

**Reduction sleeve Ø 40**

| | |
|---|---|
| 240540001 | MT 1 |
| 240540002 | MT 2 |
| 240540003 | MT 3 |
| 240540004 | MT 4 |

**Reduction sleeve Ø 50**

| | |
|---|---|
| 240550002 | MT 2 |
| 240550003 | MT 3 |
| 240550004 | MT 4 |

## Collets DIN 6499B (ER/ESX)

| ER 11 | mm | inch |
|---|---|---|
| 190011000 | ø 7-0.5 | ø 0.276-0.020 |
| 190011010 | ø 1-0.5 | ø 0.039-0.020 |
| 190011015 | ø 1.5-1 | ø 0.059-0.039 |
| 190011020 | ø 2-1.5 | ø 0.079-0.059 |
| 190011025 | ø 2.5-2 | ø 0.098-0.079 |
| 190011030 | ø 3-2.5 | ø 0.118-0.098 |
| 190011035 | ø 3.5-3 | ø 0.138-0.118 |
| 190011040 | ø 4-3.5 | ø 0.158-0.138 |
| 190011045 | ø 4.5-4 | ø 0.177-0.158 |
| 190011050 | ø 5-4.5 | ø 0.197-0.177 |
| 190011055 | ø 5.5-5 | ø 0.217-0.197 |
| 190011060 | ø 6-5.5 | ø 0.236-0.217 |
| 190011065 | ø 6.5-6 | ø 0.256-0.236 |
| 190011070 | ø 7-6.5 | ø 0.276-0.256 |

| ER 16 | mm | inch |
|---|---|---|
| 190016000 | ø 10-0.5 | ø 0.394-0.020 |
| 190016010 | ø 1-0.5 | ø 0.039-0.020 |
| 190016020 | ø 2-1 | ø 0.079-0.039 |
| 190016030 | ø 3-2 | ø 0.118-0.079 |
| 190016040 | ø 4-3 | ø 0.158-0.118 |
| 190016050 | ø 5-4 | ø 0.197-0.158 |
| 190016060 | ø 6-5 | ø 0.236-0.197 |
| 190016070 | ø 7-6 | ø 0.276-0.236 |
| 190016080 | ø 8-7 | ø 0.315-0.276 |
| 190016090 | ø 9-8 | ø 0.354-0.315 |
| 190016100 | ø 10-9 | ø 0.394-0.354 |

| ER 20 | mm | inch |
|---|---|---|
| 190020000 | ø 13-1 | ø 0.512-0.039 |
| 190020010 | ø 1-0.5 | ø 0.039-0.020 |
| 190020020 | ø 2-1 | ø 0.079-0.039 |
| 190020030 | ø 3-2 | ø 0.118-0.079 |
| 190020040 | ø 4-3 | ø 0.157-0.118 |
| 190020050 | ø 5-4 | ø 0.197-0.157 |
| 190020060 | ø 6-5 | ø 0.236-0.197 |
| 190020070 | ø 7-6 | ø 0.276-0.236 |
| 190020080 | ø 8-7 | ø 0.315-0.276 |
| 190020090 | ø 9-8 | ø 0.354-0.315 |
| 190020100 | ø 10-9 | ø 0.394-0.354 |
| 190020110 | ø 11-10 | ø 0.433-0.394 |
| 190020120 | ø 12-11 | ø 0.472-0.433 |
| 190020130 | ø 13-12 | ø 0.512-0.472 |

## Collets DIN 6499B (ER/ESX)

| ER 25 | mm | inch |
|---|---|---|
| 190025000 | ø 16-1 | ø 0.630-0.039 |
| 190025020 | ø 2-1 | ø 0.079-0.039 |
| 190025030 | ø 3-2 | ø 0.118-0.079 |
| 190025040 | ø 4-3 | ø 0.157-0.118 |
| 190025050 | ø 5-4 | ø 0.197-0.157 |
| 190025060 | ø 6-5 | ø 0.236-0.197 |
| 190025070 | ø 7-6 | ø 0.276-0.236 |
| 190025080 | ø 8-7 | ø 0.315-0.276 |
| 190025090 | ø 9-8 | ø 0.354-0.315 |
| 190025100 | ø 10-9 | ø 0.394-0.354 |
| 190025110 | ø 11-10 | ø 0.433-0.394 |
| 190025120 | ø 12-11 | ø 0.472-0.433 |
| 190025130 | ø 13-12 | ø 0.512-0.472 |
| 190025140 | ø 14-13 | ø 0.551-0.512 |
| 190025150 | ø 15-14 | ø 0.591-0.551 |
| 190025160 | ø 16-15 | ø 0.630-0.591 |

| ER 32 | mm | inch |
|---|---|---|
| 190032000 | ø 20-2 | ø 0.787-0.079 |
| 190032030 | ø 3-2 | ø 0.118-0.079 |
| 190032040 | ø 4-3 | ø 0.157-0.118 |
| 190032050 | ø 5-4 | ø 0.197-0.157 |
| 190032060 | ø 6-5 | ø 0.236-0.197 |
| 190032070 | ø 7-6 | ø 0.276-0.236 |
| 190032080 | ø 8-7 | ø 0.315-0.276 |
| 190032090 | ø 9-8 | ø 0.354-0.315 |
| 190032100 | ø 10-9 | ø 0.394-0.354 |
| 190032110 | ø 11-10 | ø 0.433-0.394 |
| 190032120 | ø 12-11 | ø 0.472-0.433 |
| 190032130 | ø 13-12 | ø 0.512-0.472 |
| 190032140 | ø 14-13 | ø 0.551-0.512 |
| 190032150 | ø 15-14 | ø 0.591-0.551 |
| 190032160 | ø 16-15 | ø 0.630-0.591 |
| 190032170 | ø 17-16 | ø 0.669-0.630 |
| 190032180 | ø 18-17 | ø 0.709-0.669 |
| 190032190 | ø 19-18 | ø 0.748-0.709 |
| 190032200 | ø 20-19 | ø 0.787-0.748 |


© WTO GmbH * Subject to change without notice * www.wto.de

## Collets DIN 6499B (ER/ESX)

| ER 40 | mm | inch |
|---|---|---|
| 190040000 | ø 26-3 | ø 1.024-0.118 |
| 190040040 | ø 4-3 | ø 0.157-0.118 |
| 190040050 | ø 5-4 | ø 0.197-0.157 |
| 190040060 | ø 6-5 | ø 0.236-0.197 |
| 190040070 | ø 7-6 | ø 0.276-0.236 |
| 190040080 | ø 8-7 | ø 0.315-0.276 |
| 190040090 | ø 9-8 | ø 0.354-0.315 |
| 190040100 | ø 10-9 | ø 0.394-0.354 |
| 190040110 | ø 11-10 | ø 0.433-0.394 |
| 190040120 | ø 12-11 | ø 0.472-0.433 |
| 190040130 | ø 13-12 | ø 0.512-0.472 |
| 190040140 | ø 14-13 | ø 0.551-0.512 |
| 190040150 | ø 15-14 | ø 0.591-0.551 |
| 190040160 | ø 16-15 | ø 0.630-0.591 |
| 190040170 | ø 17-16 | ø 0.669-0.630 |
| 190040180 | ø 18-17 | ø 0.709-0.669 |
| 190040190 | ø 19-18 | ø 0.748-0.709 |
| 190040200 | ø 20-19 | ø 0.787-0.748 |
| 190040210 | ø 21-20 | ø 0.827-0.787 |
| 190040220 | ø 22-21 | ø 0.866-0.827 |
| 190040230 | ø 23-22 | ø 0.906-0.866 |
| 190040240 | ø 24-23 | ø 0.945-0.906 |
| 190040250 | ø 25-24 | ø 0.984-0.945 |
| 190040260 | ø 26-25 | ø 1.024-0.984 |

| ER 50 | mm | inch |
|---|---|---|
| 190050000 | ø 34-10 | ø 1.339-0.394 |
| 190050060 | ø 6-4 | ø 0.236-0.157 |
| 190050080 | ø 8-6 | ø 0.315-0.236 |
| 190050100 | ø 10-8 | ø 0.394-0.315 |
| 190050120 | ø 12-10 | ø 0.472-0.394 |
| 190050140 | ø 14-12 | ø 0.551-0.472 |
| 190050160 | ø 16-14 | ø 0.630-0.551 |
| 190050180 | ø 18-16 | ø 0,709-0,630 |
| 190050200 | ø 20-18 | ø 0.787-0.709 |
| 190050220 | ø 22-20 | ø 0.866-0.787 |
| 190050240 | ø 24-22 | ø 0.945-0.866 |
| 190050260 | ø 26-24 | ø 1.024-0.945 |
| 190050280 | ø 28-26 | ø 1.102-1.024 |
| 190050300 | ø 30-28 | ø 1.181-1.102 |
| 190050320 | ø 32-30 | ø 1.260-1.181 |
| 190050340 | ø 34-32 | ø 1.339-1.260 |

## Collets DIN 6499D (ER/ESX) - sealed, for IC

| ER 11 | mm | inch |
|---|---|---|
| 191011030 | ø 3 | |
| 191011040 | ø 4 | |
| 191011050 | ø 5 | |
| 191011060 | ø 6 | |
| 191111013-in | | ø 0.125 |
| 191111019-in | | ø 0.188 |
| 191111025-in | | ø 0.25 |

| ER 16 | mm | inch |
|---|---|---|
| 191016000 | ø 3-10 | |
| 191016030 | ø 3 | |
| 191016040 | ø 4 | |
| 191016050 | ø 5 | |
| 191016060 | ø 6 | |
| 191016070 | ø 7 | |
| 191016080 | ø 8 | |
| 191016090 | ø 9 | |
| 191016100 | ø 10 | |
| 191116001 | | ø 0.125-0.375 |
| 191116013-in | | ø 0.125 |
| 191116019-in | | ø 0.188 |
| 191116025-in | | ø 0.25 |
| 191116031-in | | ø 0.313 |
| 191116038-in | | ø 0.375 |

| ER 20 | mm | inch |
|---|---|---|
| 191020000 | ø 3-12 | |
| 191020030 | ø 3 | |
| 191020040 | ø 4 | |
| 191020050 | ø 5 | |
| 191020060 | ø 6 | |
| 191020070 | ø 7 | |
| 191020080 | ø 8 | |
| 191020090 | ø 9 | |
| 191020100 | ø 10 | |
| 191020110 | ø 11 | |
| 191020120 | ø 12 | |
| 191120001 | | ø 0.125-0.5 |
| 191120013-in | | ø 0.125 |
| 191120019-in | | ø 0.188 |
| 191120025-in | | ø 0.25 |
| 191120031-in | | ø 0.313 |
| 191120038-in | | ø 0.375 |
| 191120044-in | | ø 0.438 |
| 191120050-in | | ø 0.5 |

## Collets DIN 6499D (ER/ESX) - sealed, for IC

| ER 25 | mm | inch |
|---|---|---|
| 191025000 | ø 4-16 | |
| 191025030 | ø 3 | |
| 191025040 | ø 4 | |
| 191025050 | ø 5 | |
| 191025060 | ø 6 | |
| 191025070 | ø 7 | |
| 191025080 | ø 8 | |
| 191025090 | ø 9 | |
| 191025100 | ø 10 | |
| 191025110 | ø 11 | |
| 191025120 | ø 12 | |
| 191025130 | ø 13 | |
| 191025140 | ø 14 | |
| 191025150 | ø 15 | |
| 191025160 | ø 16 | |
| 191125001 | | ø 0.25-0.625 |
| 191125025-in | | ø 0.25 |
| 191125031-in | | ø 0.313 |
| 191125038-in | | ø 0.375 |
| 191125044-in | | ø 0.438 |
| 191125050-in | | ø 0.5 |
| 191125056-in | | ø 0.563 |
| 191125063-in | | ø 0.625 |

| ER 32 | mm | inch |
|---|---|---|
| 191032000 | ø 4-20 | |
| 191032030 | ø 3 | |
| 191032040 | ø 4 | |
| 191032050 | ø 5 | |
| 191032060 | ø 6 | |
| 191032070 | ø 7 | |
| 191032080 | ø 8 | |
| 191032090 | ø 9 | |
| 191032100 | ø 10 | |
| 191032110 | ø 11 | |
| 191032120 | ø 12 | |
| 191032130 | ø 13 | |
| 191032140 | ø 14 | |
| 191032150 | ø 15 | |
| 191032160 | ø 16 | |
| 191032170 | ø 17 | |
| 191032180 | ø 18 | |
| 191032190 | ø 19 | |
| 191032200 | ø 20 | |
| 191132001 | | ø 0.25-0.75 |
| 191132025-in | | ø 0.25 |
| 191132031-in | | ø 0.313 |
| 191132038-in | | ø 0.375 |
| 191132044-in | | ø 0.438 |
| 191132050-in | | ø 0.5 |
| 191132056-in | | ø 0.563 |
| 191132063-in | | ø 0.625 |
| 191132069-in | | ø 0.688 |
| 191132075-in | | ø 0.75 |

## Collets DIN 6499D (ER/ESX) - sealed, for IC

| ER 40 | mm | inch |
|---|---|---|
| 191040060 | ø 6 | |
| 191040080 | ø 8 | |
| 191040100 | ø 10 | |
| 191040120 | ø 12 | |
| 191040140 | ø 14 | |
| 191040160 | ø 16 | |
| 191040180 | ø 18 | |
| 191040200 | ø 20 | |
| 191040220 | ø 22 | |
| 191040250 | ø 25 | |
| 191140025-in | | ø 0.25 |
| 191140031-in | | ø 0.313 |
| 191140038-in | | ø 0.375 |
| 191140044-in | | ø 0.438 |
| 191140050-in | | ø 0.5 |
| 191140056-in | | ø 0.563 |
| 191140063-in | | ø 0.625 |
| 191140069-in | | ø 0.688 |
| 191140075-in | | ø 0.75 |
| 191140088-in | | ø 0.875 |
| 191140100-in | | ø 1 |



© WTO GmbH * Subject to change without notice * www.wto.de

## Notes

© WTO GmbH * Subject to change without notice * www.wto.de

## Quality without compromise.

### All manufacturing steps are based on highest precision.

According to our own device that for the manufacture of high precision tooling systems high precision machine tools are essential we only use the latest machine tool technology to manufacture our parts.

At WTO not only the final products but also all manufacturing steps are checked and documented.
All our products are measured on high precision 3D-coordinate-measuring machines.

# WTO worldwide

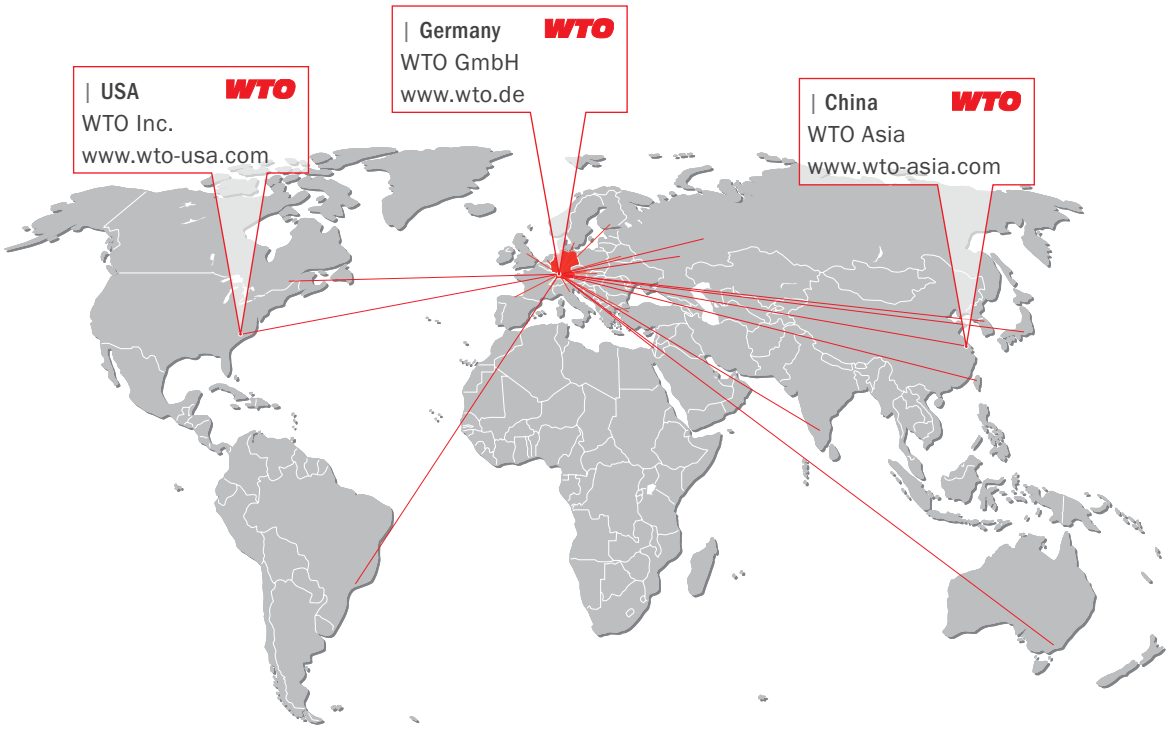


**WTO GmbH**
**Auf der oberen Au 45**
**77797 Ohlsbach**
**Germany**

**WTO USA**
**13900-F**
**South Lakes Drive**
**Charlotte, NC 28273**
**USA**

**WTO Asia**
**Room 109-110, Building 2**
**No. 228 Banting Road**
**Jiuting Town,**
**Songjiang District**
**201615 Shanghai**
**China**

---

**Our distribution partners. Competence right there.**

**| Australia**
Dimac Tooling Ltd.
sales@dimac.com.au

**| Belarus**
LLC "PMI Engineering"
tool@pmi.by

**| Brazil**
TF2
tfdois@tfdois.com.br

**| Canada**
Mittmann Industrial Inc.
info@mittmann.com

**| China**
Shanghai Gangde
wtocando@yahoo.com

**| Czech Republic**
ALBA precision, spol. s.r.o.
info@albaprecision.cz

**| Denmark**
Tool-part
cj@tool-part.dk

**| Finland**
Suomen Terätuonti Oy
myynti@stt.as

**| France**
Philippe Tagliafero
pta@wto.de

**| Great Britain**
Cutwel Ltd.
sales@cutwel.net

**| India**
Ulhas Patil
u.patil@wto-asia.com

**| Israel**
E.Y.A.R. Ltd.
boris@eyar.co.il

**| Italy**
Prymark srl
commerciale@prymark.it

**| Japan**
NK Works Co. Ltd.
k_samba@nk-works.co.jp

**| Korea**
WTO Office Korea
is.chon@wto-korea.com

**| Mexico**
Workholding Engineering De México
info@wem.com.mx

**| Netherlands**
Toologic BeNeLux B.V.
info@toologic-benelux.nl

**| Norway**
Helge Karlsen Verktøy og Maskin AS
hkvm@hkvm.no

**| Poland**
ARCO Andrzej Rudenko
info@arcotools.pl

**| Romania**
SC Elif Trading SRL
bulent.ozkan@eliftrading.com

**| Russia**
WTO Office Russia
office@wto-russia.com

**| Slovakia**
ALBA precision s.r.o.
albaprecision@albaprecision.sk

**| Spain**
ITALMATIC, S.A.
italmatic@italmatic.es

**| Sweden**
Komet Scandinavia AB
scandinavia@kometgroup.com

**| Switzerland**
Utilis AG
info@utilis.com

**| Taiwan**
Kaiko Co., Ltd.
info@kaiko.com.tw

**| Turkey**
MYK CNC MAKINA SAN. VE
huseyin.tatlidil@mykcnc.com.tr

**| Ukraine**
„LLC" SPA Stankopromimport
info@phoenix-ua.com

09 I 2019 en