Mazak

WTO

Toolholder Program

QT/QTS 100-250, M/MY/MS/MSY
QT 200, 250 M/MY/MS/MSY (16D)
QT/QTS 300, 350 M/MY/MS/MSY
QTC/QTU 100-350 M/MY/MS/MSY
QT/QTN 100 MS/MSY (VDI)
QT/QTN 200, 250 MS/MSY (VDI)
QT/QTN 300-450 MSY (VDI)
Hyper Quadrex 100, 150 MSY
Hyper Quadrex 200, 250 MSY

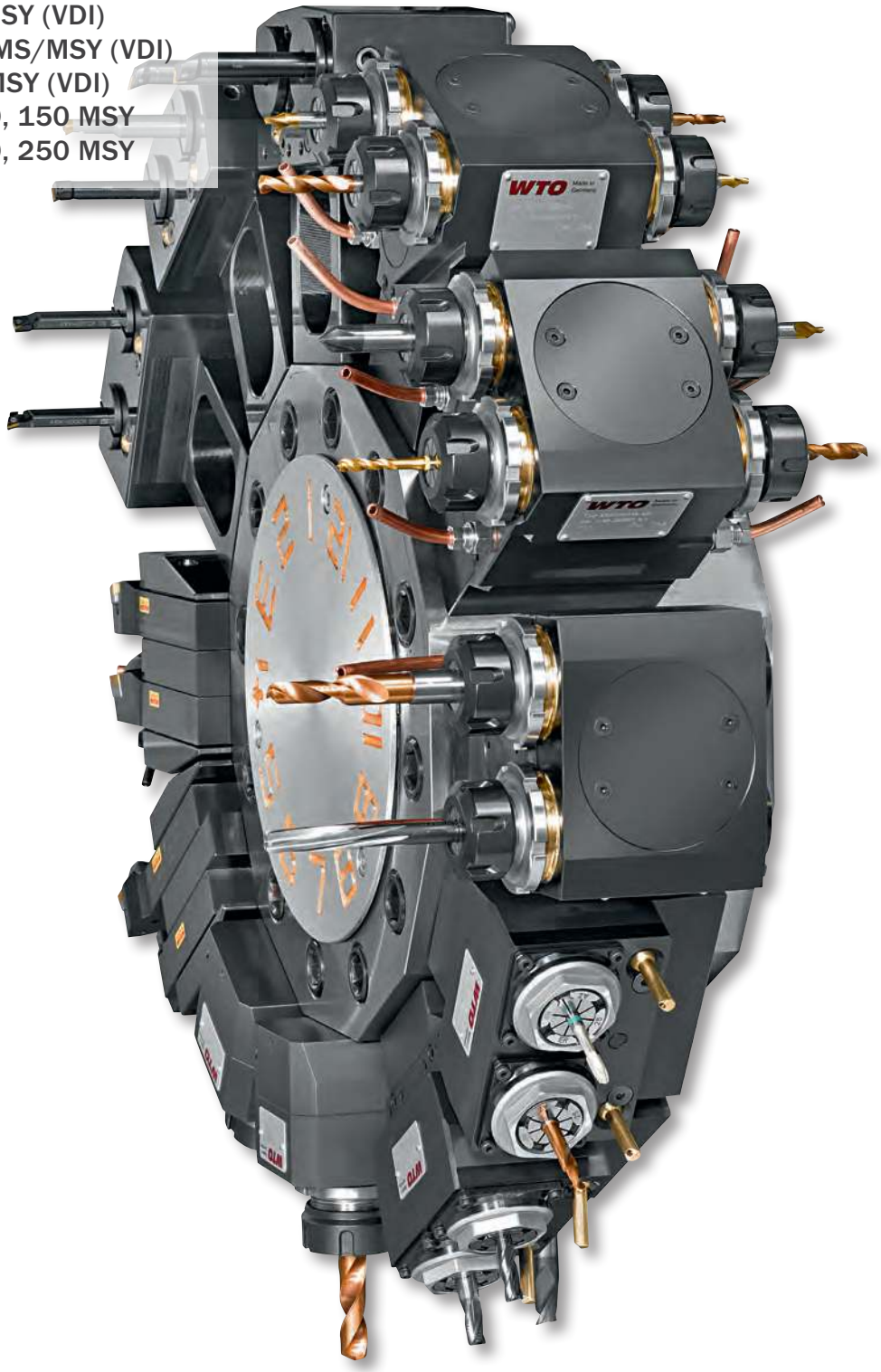

WTO

Mazak

QuickFlex®

The new quick change system for
high performance and precision.

Minimal investment, maximal expandability.

Designed
for
Mazak

Contents

QT/QTS 100-250, M/MY/MS/MSY	Page	4 - 8
QT 200, 250 M/MY/MS/MSY (16D)	Page	9 - 12
QT/QTS 300, 350 M/MY/MS/MSY	Page	13 - 14
QTC/QTU 100-350 M/MY/MS/MSY	Page	15 - 19
QT/QTN 100 MS/MSY (VDI)	Page	20 - 23
QT/QTN 200, 250 MS/MSY (VDI)	Page	24 - 26
QT/QTN 300-450 MSY (VDI)	Page	27 - 29
Hyper Quadrex 100, 150 MSY	Page	30 - 33
Hyper Quadrex 200, 250 MSY	Page	34 - 37
Reduction sleeves	Page	38 - 39
Collets	Page	40 - 42

EC = External coolant supply
HP-IC = High pressure internal coolant supply through cutting tool
IC 80 bar = Internal and external coolant supply
Max. coolant pressure = 80 bar
IC 30 bar = Internal and external coolant supply
Max. coolant pressure = 30 bar
Only use filtered coolant fluid (max. particle size = 50 µm)
Do not run without coolant
Do not use for machining abrasive materials such as cast iron, etc.

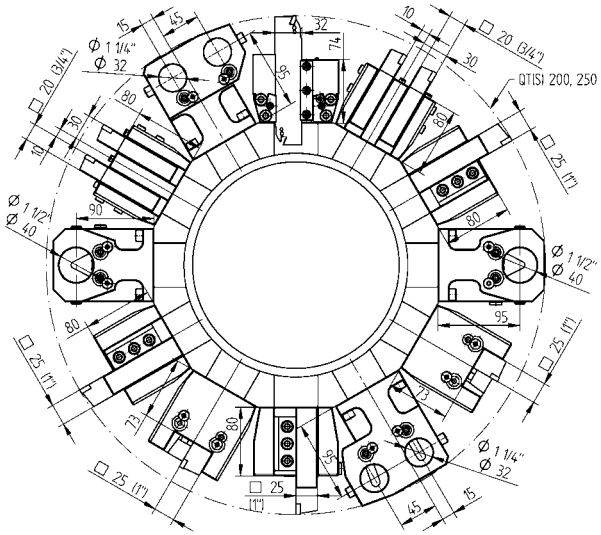

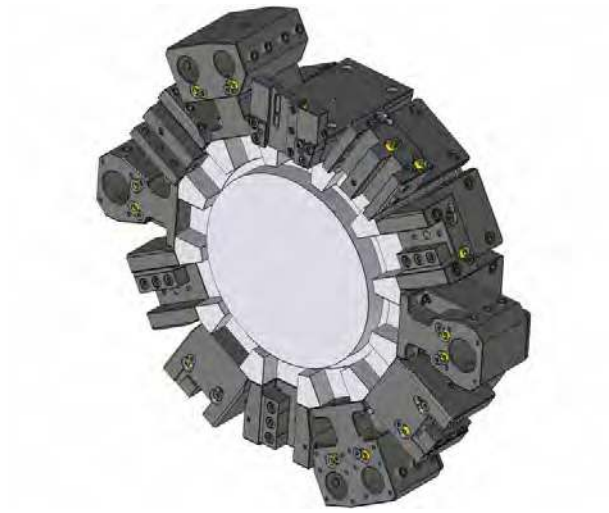

Static Toolholders - Standard Program

OD cutting holder, HP-IC

20	48-107026-HP	IC 80 bar
25	48-91361-HP	IC 80 bar
3/4"	48-107027-HP	IC 80 bar
1"	48-91362-HP	IC 80 bar

OD cutting holder, both sides, HP-IC

25	48-106347-HP	IC 80 bar
1"	48-106477-HP	IC 80 bar

Face cutting holder

25	48-91363

Face cutting holder

1"	48-91364

Face cutting holder, both sides

25	48-107240
1"	48-107331

Combination toolholder, universal, LF=90 (QT/QTS 100, QT 200-250 16D)

Ø 32	48-106763	IC 80 bar
	241132016 ER25	
	241132020 ER32	
Ø 40	48-107209	IC 80 bar
	241140020 ER32	
Ø 1 1/4"	48-106764	IC 80 bar
	2411125020 ER32	
Ø 1 1/2"	48-107210	IC 80 bar
	2411150020 ER32	

Static Toolholders - Standard Program

Combination toolholder, universal, LF=95 (QT/QTS 200-250, QTC/QTU 100-350)

Ø 40	48-107211	IC 80 bar
	241140020 ER32	
Ø 1 1/2"	48-107212	IC 80 bar
	2411150020 ER32	

Combination toolholder, both sides

Ø 40	48-106346	IC 80 bar
Ø 1 1/2"	48-106571	IC 80 bar

Plug

48-106936

© WTO GmbH * Subject to change without notice * www.wto.de

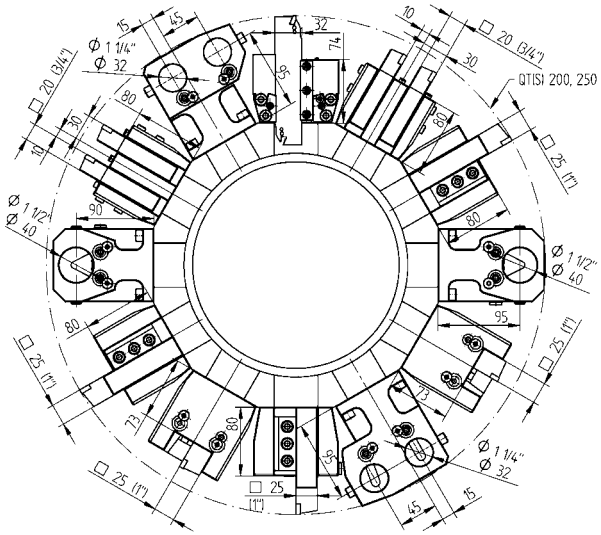

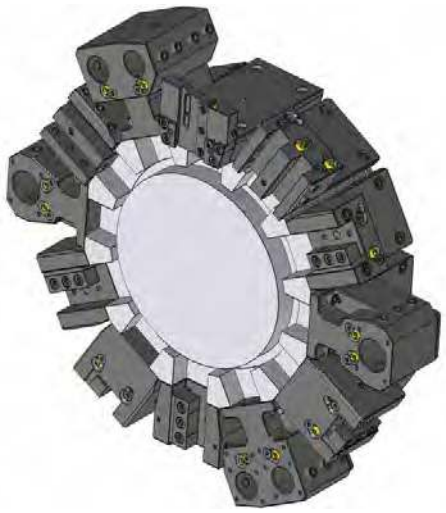

Static Toolholders - Enhanced Program

OD cutting holder, double, Y axis

20 (3/4")	48-106582

OD cutting holder, both sides, double, Y axis

20 (3/4")	48-106575

Cut-off holder, adjustable

SH 32	48-99068

Cut-off holder, adjustable, HP-IC

SH 32	48-102268R	IC 80 bar
SH 32	48-102268L	IC 80 bar

Combination toolholder, universal, double, Y axis

Ø 32	48-106578
	241132016 ER25
	241132020 ER32
Ø 1 1/4"	48-106579
	2411125020 ER32

Combination toolholder, both sides, double, Y axis

Ø 32	48-106584	IC 80 bar
Ø 1 1/4"	48-106595	IC 80 bar

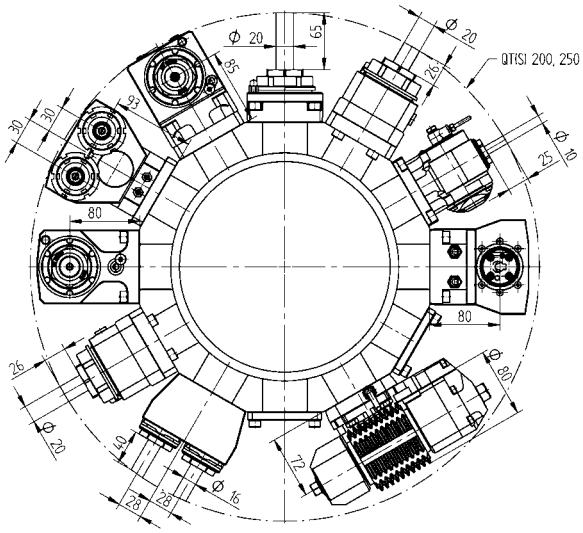

Driven Toolholders - QuickFlex®

Straight drill/milling unit

ER-32 QF 420132012-68 1:1 EC
0067732000

ER-32 QF 420132013-68 1:1 IC 80 bar
0067732000

Straight drill/milling unit (12000 RPM)

ER-32 QF 420132016-68 1:1 EC
0067732000

ER-32 QF 420132017-68 1:1 IC 80 bar
0067732000

Right angle drill/milling unit

ER-32 QF 420532012-68 1:1 EC
0067732000

ER-32 QF 420532013-68 1:1 IC 80 bar
0067732000

Right angle drill/milling unit (12000 RPM)

ER-32 QF 420532020-68 1:1 EC
0067732000

ER-32 QF 420532021-68 1:1 IC 80 bar
0067732000

Right angle drill/milling unit, sub spindle

ER-32 QF 420532024-68 1:1 EC
0067732000

ER-32 QF 420532025-68 1:1 IC 80 bar
0067732000

Driven Toolholders - QuickFlex®

Right angle drill/milling unit, sub spindle (12000 RPM)

ER-32 QF 420532022-68 1:1 EC
0067732000

ER-32 QF 420532023-68 1:1 IC 80 bar
0067732000

Right angle drill/milling unit, both sides

ER-32 QF 420532026-68 1:1 EC
0067732000

Right angle drill/milling unit, both sides (12000 RPM)

ER-32 QF 420532019-68 1:1 EC
0067732000

© WTO GmbH * Subject to change without notice * www.wto.de

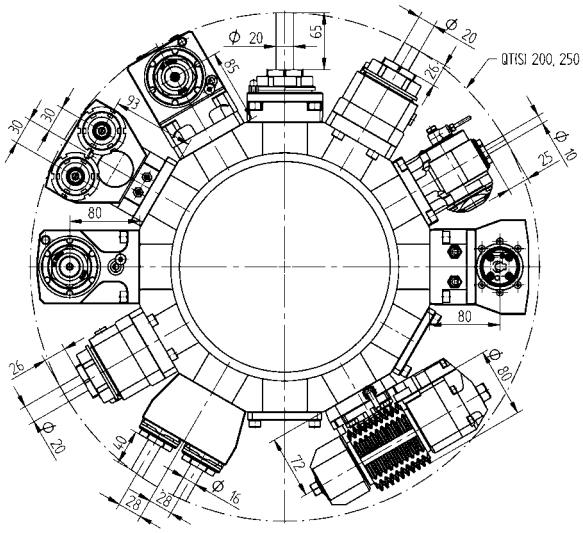

Driven Toolholders - Enhanced Program

Straight offset drill/milling unit

ER-32 QF	420132018-68	1:1	EC
	0067732000		
ER-32 QF	420132019-68	1:1	IC 80 bar
	0067732000		
ER-25 QF	420125010-68	1:2	EC
	0067725001		
ER-25 QF	420125011-68	1:2	IC 80 bar
	0067725001		
ER-32 QF	420132020-68	2:1	EC
	0067732000		
ER-32 QF	420132021-68	2:1	IC 80 bar
	0067732000		

Straight offset drill/milling unit (12000 RPM)

ER-32 QF	420132022-68	1:1	EC
	0067732000		
ER-32 QF	420132023-68	1:1	IC 80 bar
	0067732000		

Straight offset drill/milling unit, both sides

ER-32 QF	423002010-68	1:1	EC
	0067732000		
ER-32 QF	423002011-68	1:1	IC 80 bar
	0067732000		

Driven Toolholders - Enhanced Program

Right angle drill/milling unit

ER-25 QF	420525010-68	1:2	EC
	0067725001		
ER-25 QF	420525011-68	1:2	IC 80 bar
	0067725001		
ER-32 QF	420532014-68	2:1	EC
	0067732000		
ER-32 QF	420532015-68	2:1	IC 80 bar
	0067732000		

Adjustable angle drill/milling unit

ER 16	411010002-68	1:1	EC
	00675000913		
ER 16	411010003-68	1:1	IC 80 bar
	00675000913		
ER 11	411007002-68	1:2	EC
	00675000914		
ER 11	411007003-68	1:2	IC 80 bar
	00675000914		

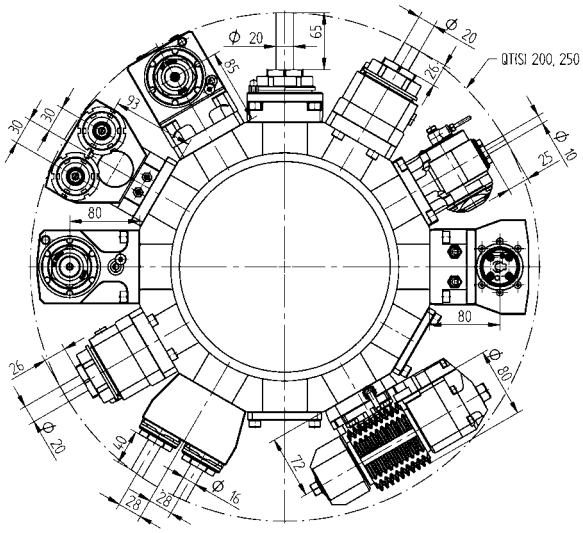

Driven Toolholders - Enhanced Program

Gear hobbing unit

Type 16-1	411500007-68	1:1	EC
	00675000926		
	160016161 Ø 16		
	160022161 Ø 22		
	160027161 Ø 27		
	160015161 Ø 5/8"		
	160019161 Ø 3/4"		
	160025161 Ø 1"		
	96394		
Type 16-1	411500008-68	2:1	EC
	00675000926		
	160016161 Ø 16		
	160022161 Ø 22		
	160027161 Ø 27		
	160015161 Ø 5/8"		
	160019161 Ø 3/4"		
	160025161 Ø 1"		
	96394		

Straight drill/milling unit, double, Y axis

ER 25	413002008-68	1:1	EC
	00675000932		

Straight drill/milling unit, double, Y axis

ER 25	413002007-68	1:1	IC 80 bar
	00675000932		

Driven Toolholders - Enhanced Program

2-spindle - Right angle drill/milling unit, Y axis

ER 25	413502005-68	1:1	EC
	00675000915		
ER 25	413502006-68	1:1	IC 80 bar
	00675000915		

2-spindle - Right angle drill/milling unit, both sides, Y axis

ER 25	413502007-68	1:1	EC
	00675000915		

Broaching unit for ID and OD

TN765050	414532000-68	1:1	EC

© WTO GmbH * Subject to change without notice * www.wto.de

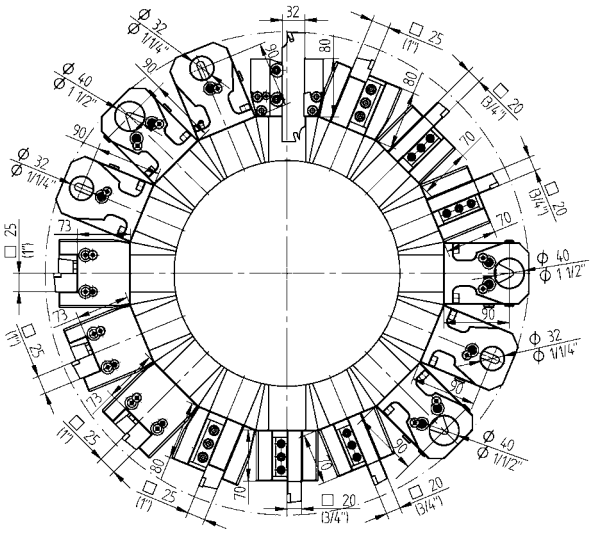

Static Toolholders - Standard Program

OD cutting holder, HP-IC

20	48-107026-HP	IC 80 bar
25	48-91361-HP	IC 80 bar
3/4"	48-107027-HP	IC 80 bar
1"	48-91362-HP	IC 80 bar

OD cutting holder, both sides, HP-IC

25	48-106347-HP	IC 80 bar
1"	48-106477-HP	IC 80 bar

Face cutting holder

25	48-91363

Combination toolholder, universal, LF=90 (QT/QTS 100, QT 200-250 16D)

Ø 32	48-106763	IC 80 bar
	241132016 ER25	
	241132020 ER32	
Ø 40	48-107209	IC 80 bar
	241140020 ER32	
Ø 1 1/4"	48-106764	IC 80 bar
	2411125020 ER32	
Ø 1 1/2"	48-107210	IC 80 bar
	2411150020 ER32	

Combination toolholder, both sides

Ø 40	48-106346	IC 80 bar
Ø 1 1/2"	48-106571	IC 80 bar

Plug

48-106936

Static Toolholders - Enhanced Program

OD cutting holder, both sides, double, Y axis

20 (3/4")	48-106575

Cut-off holder, adjustable

SH 32	48-99068

Cut-off holder, adjustable, HP-IC

SH 32	48-102268R	IC 80 bar
SH 32	48-102268L	IC 80 bar

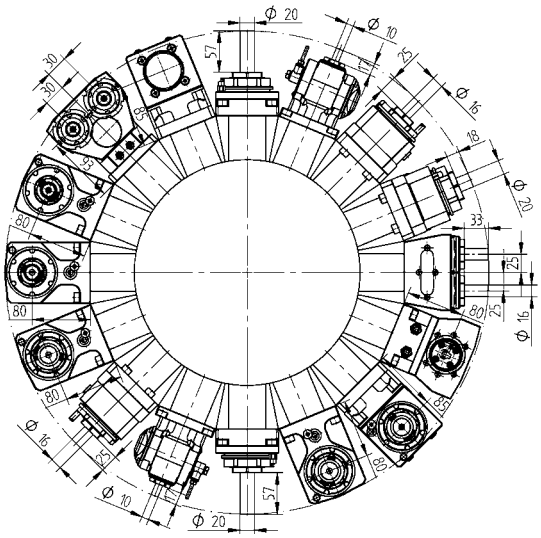

Driven Toolholders - QuickFlex®

Straight drill/milling unit

ER-32 QF 420132012-68 1:1 EC
0067732000

ER-32 QF 420132013-68 1:1 IC 80 bar
0067732000

Straight drill/milling unit (12000 RPM)

ER-32 QF 420132016-68 1:1 EC
0067732000

ER-32 QF 420132017-68 1:1 IC 80 bar
0067732000

Right angle drill/milling unit

ER-32 QF 420532012-68 1:1 EC
0067732000

ER-32 QF 420532013-68 1:1 IC 80 bar
0067732000

Right angle drill/milling unit (12000 RPM)

ER-32 QF 420532020-68 1:1 EC
0067732000

ER-32 QF 420532021-68 1:1 IC 80 bar
0067732000

Right angle drill/milling unit, sub spindle

ER-32 QF 420532024-68 1:1 EC
0067732000

ER-32 QF 420532025-68 1:1 IC 80 bar
0067732000

Driven Toolholders - QuickFlex®

Right angle drill/milling unit, sub spindle (12000 RPM)

ER-32 QF 420532022-68 1:1 EC
0067732000

ER-32 QF 420532023-68 1:1 IC 80 bar
0067732000

Right angle drill/milling unit, both sides

ER-32 QF 420532026-68 1:1 EC
0067732000

Right angle drill/milling unit, both sides (12000 RPM)

ER-32 QF 420532019-68 1:1 EC
0067732000

© WTO GmbH * Subject to change without notice * www.wto.de

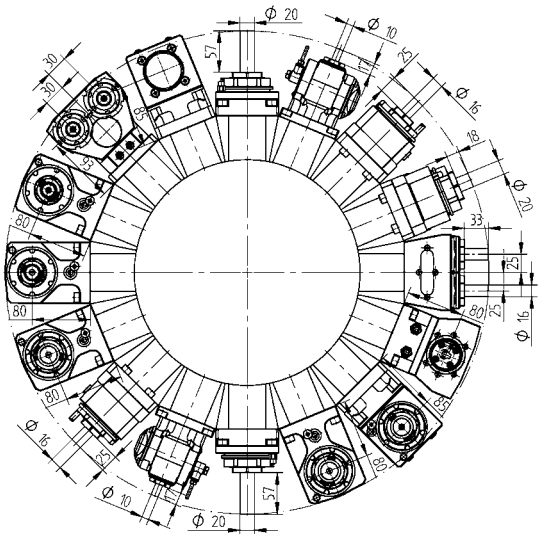

Driven Toolholders - Enhanced Program

Straight offset drill/milling unit

ER-32 QF	420132018-68	1:1	EC
	0067732000		
ER-32 QF	420132019-68	1:1	IC 80 bar
	0067732000		
ER-25 QF	420125010-68	1:2	EC
	0067725001		
ER-25 QF	420125011-68	1:2	IC 80 bar
	0067725001		
ER-32 QF	420132020-68	2:1	EC
	0067732000		
ER-32 QF	420132021-68	2:1	IC 80 bar
	0067732000		

Straight offset drill/milling unit (12000 RPM)

ER-32 QF	420132022-68	1:1	EC
	0067732000		
ER-32 QF	420132023-68	1:1	IC 80 bar
	0067732000		

Straight offset drill/milling unit, both sides

ER-32 QF	423002010-68	1:1	EC
	0067732000		
ER-32 QF	423002011-68	1:1	IC 80 bar
	0067732000		

Driven Toolholders - Enhanced Program

Right angle drill/milling unit

ER-25 QF	420525010-68	1:2	EC
	0067725001		
ER-25 QF	420525011-68	1:2	IC 80 bar
	0067725001		
ER-32 QF	420532014-68	2:1	EC
	0067732000		
ER-32 QF	420532015-68	2:1	IC 80 bar
	0067732000		

Adjustable angle drill/milling unit

ER 16	411010002-68	1:1	EC
	00675000913		
ER 16	411010003-68	1:1	IC 80 bar
	00675000913		
ER 11	411007002-68	1:2	EC
	00675000914		
ER 11	411007003-68	1:2	IC 80 bar
	00675000914		

Straight drill/milling unit, double, Y axis

ER 25	413002008-68	1:1	EC
	00675000932		

Straight drill/milling unit, double, Y axis

ER 25	413002009-68	1:1	IC 80 bar
	00675000932		

2-spindle - Right angle drill/milling unit, Y axis

ER 25	413502005-68	1:1	EC
	00675000915		
ER 25	413502006-68	1:1	IC 80 bar
	00675000915		

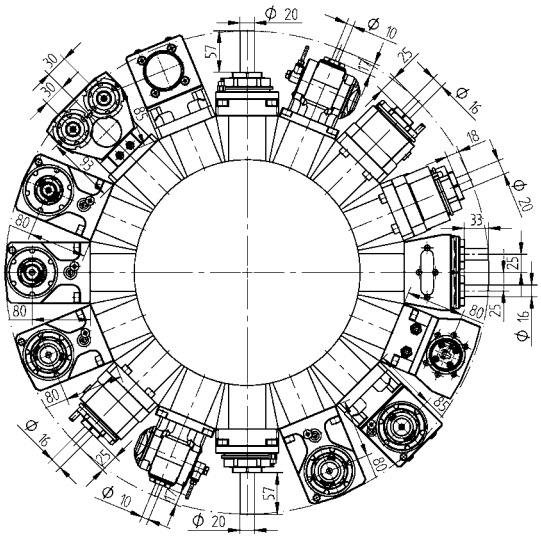

Driven Toolholders - Enhanced Program

2-spindle - Right angle drill/milling unit, both sides, Y axis

ER 25	413502007-68	1:1	EC
	00675000915		

Broaching unit for ID and OD

TN765050	414532000-68	1:1	EC

© WTO GmbH * Subject to change without notice * www.wto.de

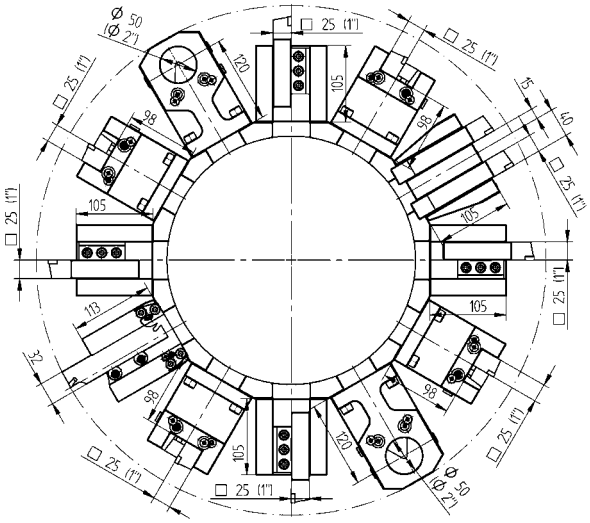

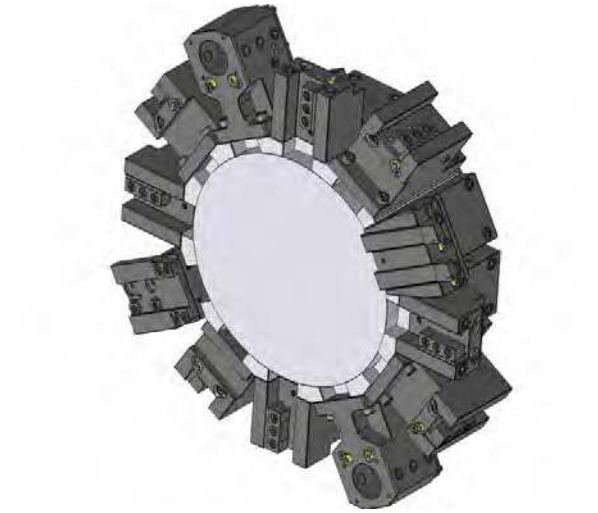

Static Toolholders - Standard Program

OD cutting holder

25	48-93004	

OD cutting holder, HP-IC

25	48-93004-HP	IC 80 bar
1"	48-93005-HP	IC 80 bar

OD cutting holder, both sides, HP-IC

25	48-109600-HP	IC 80 bar
1"	48-109601-HP	IC 80 bar

Face cutting holder

25	48-93006
1"	48-93007

Combination toolholder

Ø 50	48-93008	IC 80 bar
Ø 2"	48-93009	IC 80 bar

Combination toolholder, both sides

Ø 40	48-109611	IC 80 bar
	241140026 ER40	
Ø 1 1/2"	48-109612	IC 80 bar

Static Toolholders - Enhanced Program

OD cutting holder, double, Y axis

25(1")	48-109633

Cut-off holder, adjustable

SH 32	48-93039

Cut-off holder, adjustable, HP-IC

SH 32	48-99401R 343-810100R12	IC 80 bar
SH 32	48-99401L 343-810100L12	IC 80 bar

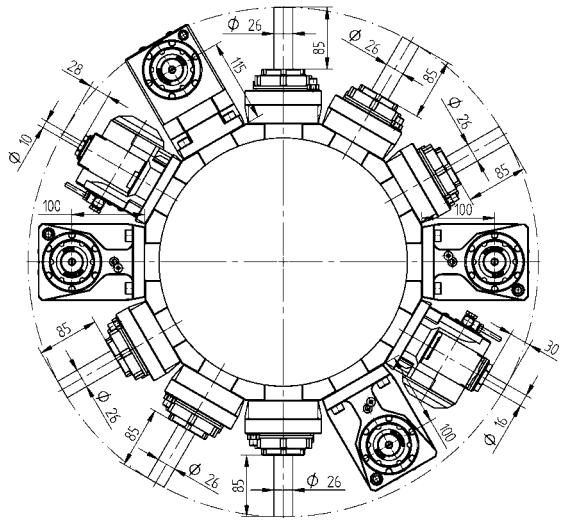

Driven Toolholders - QuickFlex®

Straight drill/milling unit

ER-40 QF	420140010-80	1:1	EC
	0067740000		
ER-40 QF	420140011-80	1:1	IC 80 bar
	0067740000		

Straight drill/milling unit (10000 RPM)

ER-40 QF	420140012-80	1:1	EC
	0067740000		
ER-40 QF	420140013-80	1:1	IC 80 bar
	0067740000		

Right angle drill/milling unit

ER-40 QF	420540010-80	1:1	EC
	0067740000		
ER-40 QF	420540011-80	1:1	IC 80 bar
	0067740000		

Right angle drill/milling unit (10000 RPM)

ER-40 QF	420540014-80	1:1	EC
	0067740000		
ER-40 QF	420540015-80	1:1	IC 80 bar
	0067740000		

Right angle drill/milling unit, sub spindle (10000 RPM)

ER-40 QF	420540016-80	1:1	EC
	0067740000		
ER-40 QF	420540017-80	1:1	IC 80 bar
	0067740000		

Right angle drill/milling unit, both sides (10000 RPM)

ER-40 QF	420540018-80	1:1	EC
	0067740000		

Driven Toolholders - Enhanced Program

Right angle drill/milling unit

ER-32 QF	420532010-80	1:2	EC
	0067732001		
ER-32 QF	420532011-80	1:2	IC 80 bar
	0067732001		
ER-40 QF	420540012-80	2:1	EC
	0067740000		
ER-40 QF	420540013-80	2:1	IC 80 bar
	0067740000		

Adjustable angle drill/milling unit

ER 25	411016000-80	1:1	EC
	00675000934		
ER 25	411016001-80	1:1	IC 80 bar
	00675000934		
ER 16	411010001-80	1:2	EC
	00675000936		
ER 16	411010002-80	1:2	IC 80 bar
	00675000936		

© WTO GmbH * Subject to change without notice * www.wto.de

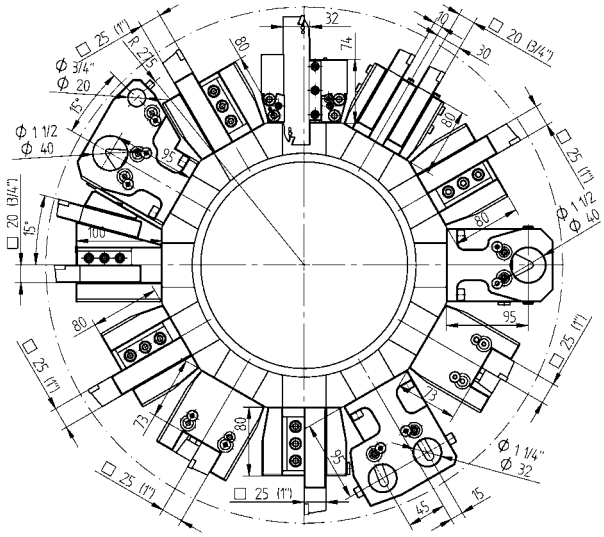

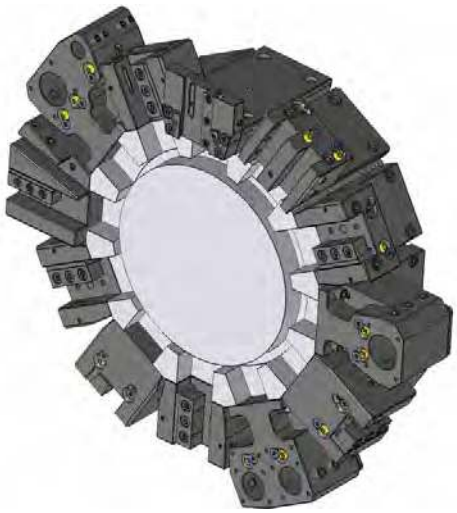

Static Toolholders - Standard Program

OD cutting holder, HP-IC

20	48-107026-HP	IC 80 bar
25	48-91361-HP	IC 80 bar
3/4"	48-107027-HP	IC 80 bar
1"	48-91362-HP	IC 80 bar

OD cutting holder, both sides, HP-IC

25	48-106347-HP	IC 80 bar
1"	48-106477-HP	IC 80 bar

Face cutting holder

25	48-91363

Face cutting holder

1"	48-91364

Face cutting holder, both sides

25	48-107240
1"	48-107331

Combination toolholder, universal, LF=95 (QT/QTS 200-250, QTC/QTU 100-350)

Ø 40	48-107211	IC 80 bar
	241140020 ER32	
Ø 1 1/2"	48-107212	IC 80 bar
	2411150020 ER32	

Combination toolholder, both sides

Ø 40	48-106346	IC 80 bar
Ø 1 1/2"	48-106571	IC 80 bar

Static Toolholders - Standard Program

Plug

48-106936

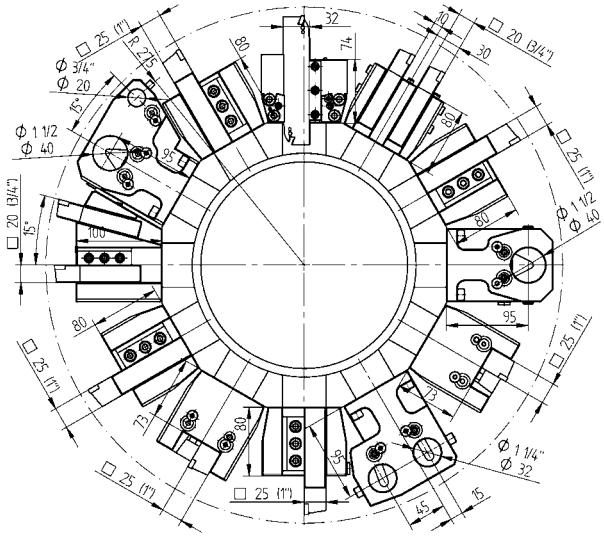

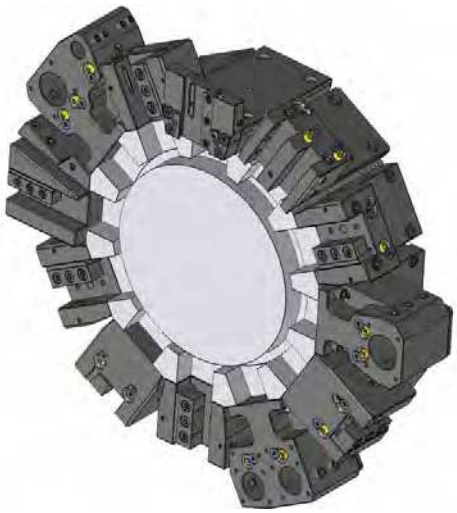

Static Toolholders - Enhanced Program

OD cutting holder, double, 24 station

20	48-111240
3/4"	48-111241

OD cutting holder, double, Y axis

20 (3/4")	48-106582

OD cutting holder, both sides, double, Y axis

20 (3/4")	48-106575

Cut-off holder, adjustable

SH 32	48-99068

Cut-off holder, adjustable, HP-IC

SH 32	48-102268R	IC 80 bar
SH 32	48-102268L	IC 80 bar

Combination toolholder, universal, double, 24 station

Ø40/20	48-111242	IC 80 bar
Ø1½"/¾"	48-111243	IC 80 bar

Combination toolholder, universal, double, Y axis

Ø 32	48-106578
	241132016 ER25
	241132020 ER32
Ø 1 1/4"	48-106579
	2411125020 ER32

Combination toolholder, both sides, double, Y axis

Ø 32	48-106584	IC 80 bar
Ø 1 1/4"	48-106595	IC 80 bar

© WTO GmbH * Subject to change without notice * www.wto.de

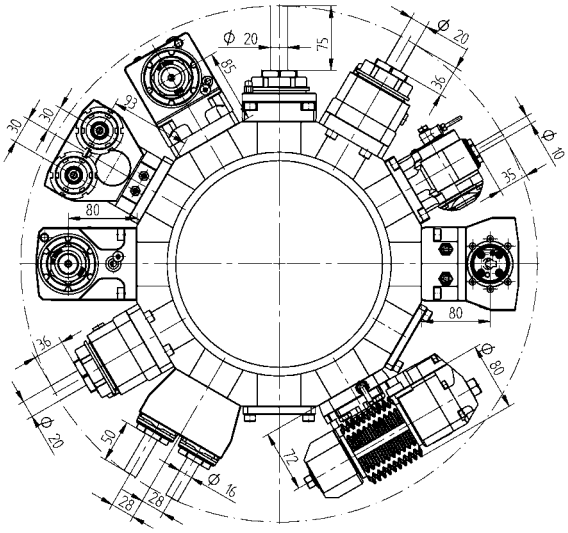

Driven Toolholders - QuickFlex®

Straight drill/milling unit

ER-32 QF	420132012-68	1:1	EC
	0067732000		
ER-32 QF	420132013-68	1:1	IC 80 bar
	0067732000		

Straight drill/milling unit (12000 RPM)

ER-32 QF	420132016-68	1:1	EC
	0067732000		
ER-32 QF	420132017-68	1:1	IC 80 bar
	0067732000		

Right angle drill/milling unit

ER-32 QF	420532012-68	1:1	EC
	0067732000		
ER-32 QF	420532013-68	1:1	IC 80 bar
	0067732000		

Right angle drill/milling unit (12000 RPM)

ER-32 QF	420532020-68	1:1	EC
	0067732000		
ER-32 QF	420532021-68	1:1	IC 80 bar
	0067732000		

Right angle drill/milling unit, sub spindle

ER-32 QF	420532024-68	1:1	EC
	0067732000		
ER-32 QF	420532025-68	1:1	IC 80 bar
	0067732000		

Driven Toolholders - QuickFlex®

Right angle drill/milling unit, sub spindle (12000 RPM)

ER-32 QF	420532022-68	1:1	EC
	0067732000		
ER-32 QF	420532023-68	1:1	IC 80 bar
	0067732000		

Right angle drill/milling unit, both sides

ER-32 QF	420532026-68	1:1	EC
	0067732000		

Right angle drill/milling unit, both sides (12000 RPM)

ER-32 QF	420532019-68	1:1	EC
	0067732000		

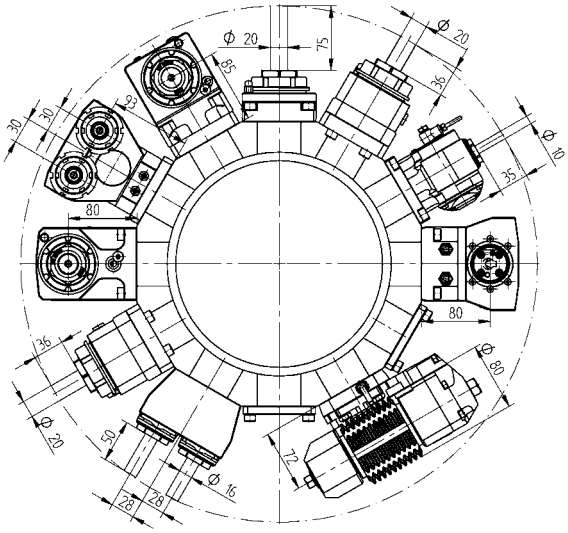

Driven Toolholders - Enhanced Program

Straight offset drill/milling unit

ER-32 QF	420132018-68	1:1	EC
	0067732000		
ER-32 QF	420132019-68	1:1	IC 80 bar
	0067732000		
ER-25 QF	420125010-68	1:2	EC
	0067725001		
ER-25 QF	420125011-68	1:2	IC 80 bar
	0067725001		
ER-32 QF	420132020-68	2:1	EC
	0067732000		
ER-32 QF	420132021-68	2:1	IC 80 bar
	0067732000		

Straight offset drill/milling unit (12000 RPM)

ER-32 QF	420132022-68	1:1	EC
	0067732000		
ER-32 QF	420132023-68	1:1	IC 80 bar
	0067732000		

Straight offset drill/milling unit, both sides

ER-32 QF	423002010-68	1:1	EC
	0067732000		
ER-32 QF	423002011-68	1:1	IC 80 bar
	0067732000		

Driven Toolholders - Enhanced Program

Right angle drill/milling unit

ER-25 QF	420525010-68	1:2	EC
	0067725001		
ER-25 QF	420525011-68	1:2	IC 80 bar
	0067725001		
ER-32 QF	420532014-68	2:1	EC
	0067732000		
ER-32 QF	420532015-68	2:1	IC 80 bar
	0067732000		

Adjustable angle drill/milling unit

ER 16	411010002-68	1:1	EC
	00675000913		
ER 16	411010003-68	1:1	IC 80 bar
	00675000913		
ER 11	411007002-68	1:2	EC
	00675000914		
ER 11	411007003-68	1:2	IC 80 bar
	00675000914		

© WTO GmbH * Subject to change without notice * www.wto.de

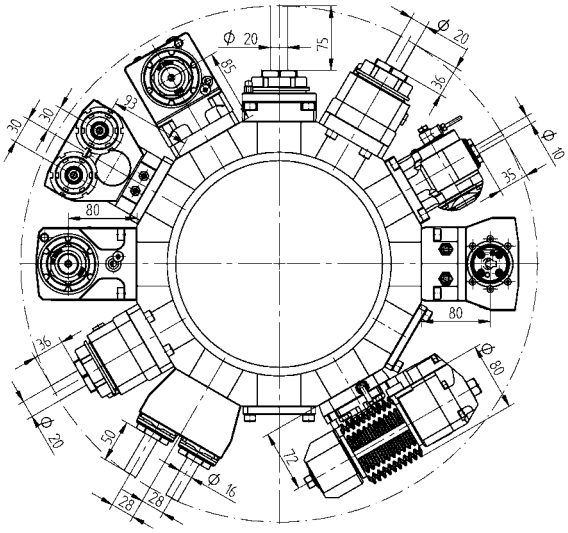

Driven Toolholders - Enhanced Program

Gear hobbing unit

Type 16-1	411500007-68	1:1	EC
	00675000926		
	160016161 Ø 16		
	160022161 Ø 22		
	160027161 Ø 27		
	160015161 Ø 5/8"		
	160019161 Ø 3/4"		
	160025161 Ø 1"		
	96394		
Type 16-1	411500008-68	2:1	EC
	00675000926		
	160016161 Ø 16		
	160022161 Ø 22		
	160027161 Ø 27		
	160015161 Ø 5/8"		
	160019161 Ø 3/4"		
	160025161 Ø 1"		
	96394		

Straight drill/milling unit, double, Y axis

ER 25	413002008-68	1:1	EC
	00675000932		

Straight drill/milling unit, double, Y axis

ER 25	413002007-68	1:1	IC 80 bar
	00675000932		

Driven Toolholders - Enhanced Program

2-spindle - Right angle drill/milling unit, Y axis

ER 25	413502005-68	1:1	EC
	00675000915		
ER 25	413502006-68	1:1	IC 80 bar
	00675000915		

2-spindle - Right angle drill/milling unit, both sides, Y axis

ER 25	413502007-68	1:1	EC
	00675000915		

Broaching unit for ID and OD

TN765050	414532000-68	1:1	EC

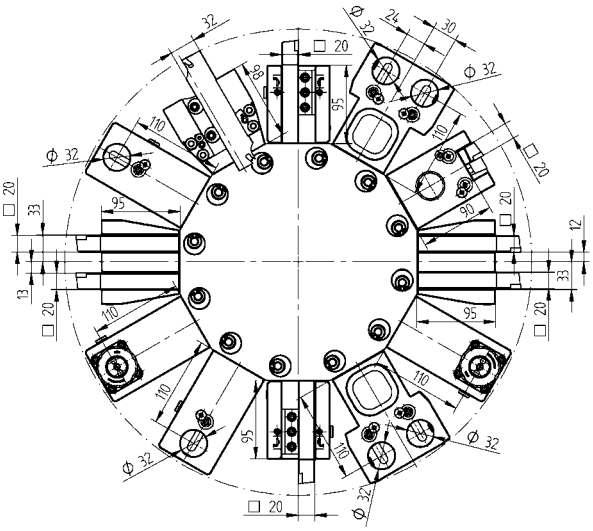

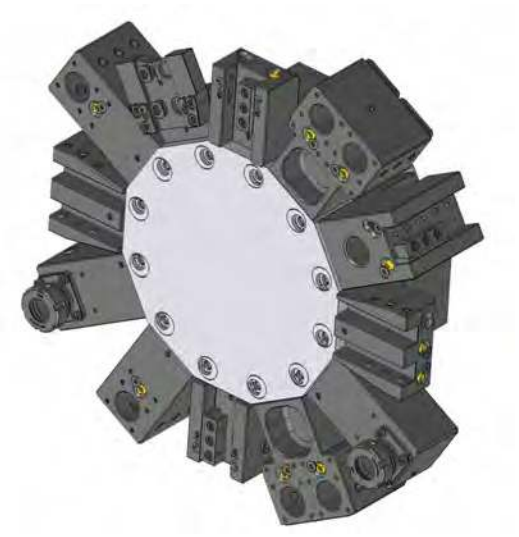

Static Toolholders - Standard Program

OD cutting holder

3/4"	48-82172	

OD cutting holder, HP-IC

20	48-82510-HP	IC 80 bar
3/4"	48-82172-HP	IC 80 bar

OD cutting holder, both sides

20	48-82511
3/4"	48-82174

OD cutting holder, both sides, HP-IC

20	48-82511-HP	IC 80 bar
3/4"	48-82174-HP	IC 80 bar

Face cutting holder

20	48-84000
3/4"	48-83999

Universal square toolholder

20	48-85368
3/4"	48-85370

Combination toolholder, universal

Ø 32	48-82367
	241132016 ER25
	241132020 ER32
Ø 1 1/4"	48-82368
	2411125020 ER32

Combination toolholder, both sides

Ø 32	48-82849
Ø 1 1/4"	48-82809

Static Toolholders - Standard Program

Collet face drill holder

ER 32	48-83726
	107532000

Collet face drill holder, both sides

ER 32	48-83727
	107532000

© WTO GmbH * Subject to change without notice * www.wto.de

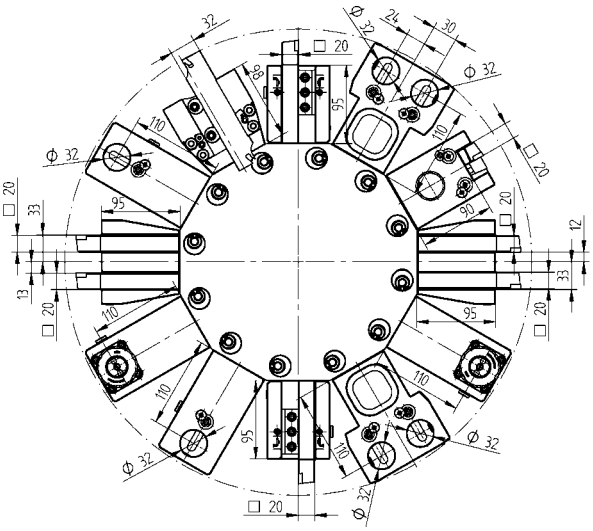

Static Toolholders - Enhanced Program

OD cutting holder, double, Y axis

20 (3/4") 48-84958

OD cutting holder, both sides, double, Y axis

20 (3/4") 48-84959

Cut-off holder, adjustable

SH 32	48-99064	EC

Cut-off holder, adjustable, HP-IC

SH 32	48-99474R 343-810100R13	IC 80 bar
SH 32	48-99474L 343-810100L13	IC 80 bar

Combination toolholder, universal, double, Y axis

Ø 32 48-84960

- 241132016 ER25
- 241132020 ER32

Ø 1 1/4" 48-84961

- 2411125020 ER32

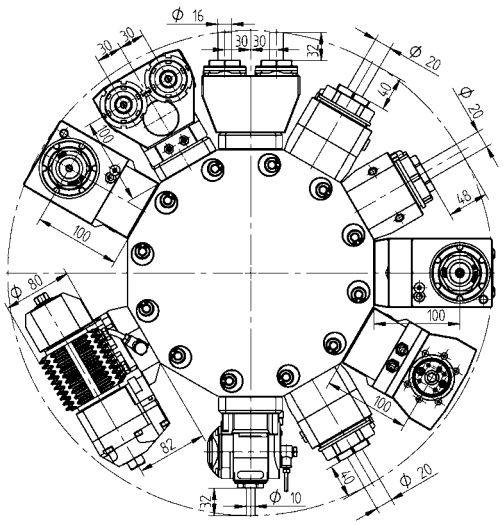

Driven Toolholders - QuickFlex®

Straight drill/milling unit

ER-32 QF	420132040-40	1:1	EC
	0067732000		
ER-32 QF	420132041-40	1:1	IC 80 bar
	0067732000		

Straight offset drill/milling unit

ER-32 QF	420132028-40	1:1	EC
	0067732000		
ER-32 QF	420132029-40	1:1	IC 80 bar
	0067732000		

Right angle drill/milling unit

ER-32 QF	420532066-40	1:1	EC
	0067732000		
ER-32 QF	420532067-40	1:1	IC 80 bar
	0067732000		

Right angle drill/milling unit, sub spindle

ER-32 QF	420532068-40	1:1	EC
	0067732000		
ER-32 QF	420532069-40	1:1	IC 80 bar
	0067732000		

Right angle drill/milling unit, both sides

ER-32 QF	420532070-40	1:1	EC
	0067732000		

Driven Toolholders - Enhanced Program

Straight offset drill/milling unit

ER-25 QF	420125020-40	1:2	EC
	0067725001		
ER-25 QF	420125021-40	1:2	IC 80 bar
	0067725001		
ER-32 QF	420132048-40	2:1	EC
	0067732000		
ER-32 QF	420132049-40	2:1	IC 80 bar
	0067732000		

Straight offset drill/milling unit, both sides

ER-32 QF	423002014-40	1:1	EC
	0067732000		
ER-32 QF	423002015-40	1:1	IC 80 bar
	0067732000		

Right angle drill/milling unit

ER-25 QF	420525030-40	1:2	EC
	0067725001		
ER-25 QF	420525031-40	1:2	IC 80 bar
	0067725001		
ER-32 QF	420532085-40	2:1	EC
	0067732000		
ER-32 QF	420532086-40	2:1	IC 80 bar
	0067732000		
ER 16	410810000-40	1:3	EC
	00675000841		
ER 16	410810001-40	1:3	IC 80 bar
	00675000841		

© WTO GmbH * Subject to change without notice * www.wto.de

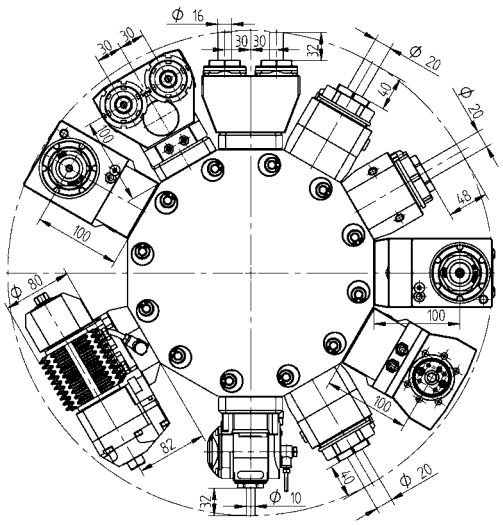

Driven Toolholders - Enhanced Program

Adjustable angle drill/milling unit

ER 16	411010005-40	1:1	EC
	00675000902		
ER 16	411010053-40	1:1	IC 80 bar
	00675000902		
ER 11	411007005-40	1:2	EC
	00675000914		
ER 11	411007006-40	1:2	IC 80 bar
	00675000914		

Slitting saw unit

Type 14-2	410900024-40	2:1	EC
	00675000460		
	160016142 Ø 16		
	160022142 Ø 22		
	160027142 Ø 27		
	160015142 Ø 5/8"		
	160019142 Ø 3/4"		
	160023142 Ø 7/8"		
	160025142 Ø 1"		

Offset slitting saw unit

Type 14-2	411500005-40	2.73:1	EC
	00675000460		
	160016142 Ø 16		
	160022142 Ø 22		
	160027142 Ø 27		
	160015142 Ø 5/8"		
	160019142 Ø 3/4"		
	160023142 Ø 7/8"		
	160025142 Ø 1"		

Driven Toolholders - Enhanced Program

Gear hobbing unit

Type 16-1	411500029-40	2:1	EC
	00675000926		
	160016161 Ø 16		
	160022161 Ø 22		
	160027161 Ø 27		
	160015161 Ø 5/8"		
	160019161 Ø 3/4"		
	160025161 Ø 1"		
	96394		

Straight drill/milling unit, double, Y axis

ER 25	413002020-40	1:1.5	EC
	00675000930		
ER 25	413002021-40	1:1.5	IC 80 bar
	00675000930		

2-spindle - Right angle drill/milling unit, Y axis

ER 25	413502010-40	1:1	EC
	00675000915		
ER 25	413502011-40	1:1	IC 80 bar
	00675000915		

Broaching unit for ID and OD

TN765050	414532009-40	1:1	EC

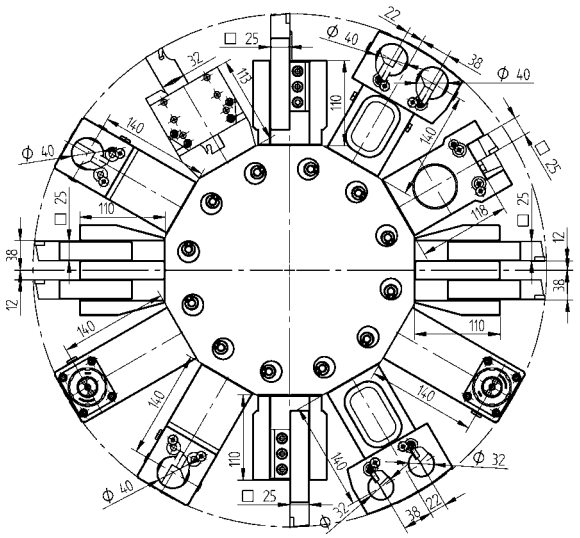

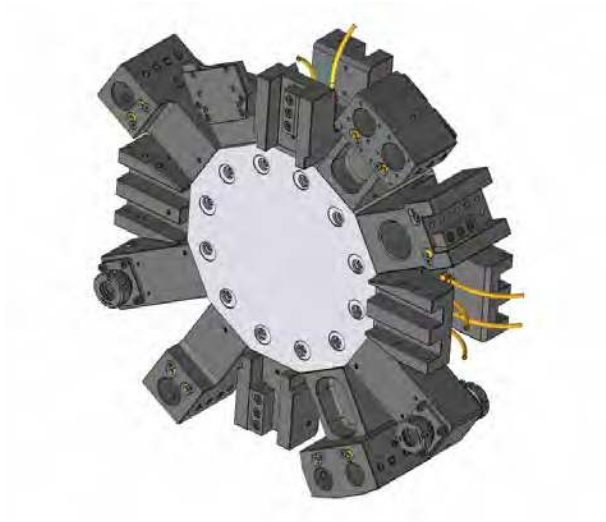

Static Toolholders - Standard Program

OD cutting holder, HP-IC

25	48-82507-HP	IC 80 bar
1"	48-82509-HP	IC 80 bar

OD cutting holder, both sides, HP-IC

25	48-82508-HP	IC 80 bar
1"	48-82162-HP	IC 80 bar

Face cutting holder

25	48-83885
1"	48-83997

Universal square toolholder

25	48-81932
1"	48-84602

Combination toolholder, universal

Ø 40	48-82363
	241140020 ER32
Ø 1 1/2"	48-82365
	2411150020 ER32

Combination toolholder, both sides

Ø 40	48-82848
Ø 1 1/2"	48-82808

Collet face drill holder

ER 32	48-83504
	107532000

Collet face drill holder, both sides

ER 32	48-83512
	107532000

Static Toolholders - Enhanced Program

OD cutting holder, double, Y axis

25(1")	48-84944

OD cutting holder, both sides, double, Y axis

25(1")	48-84945

Cut-off holder, adjustable

SH 32	48-99067

Cut-off holder, adjustable, HP-IC

SH 32	48-102264R	IC 80 bar
SH 32	48-102264L	IC 80 bar

Combination toolholder, universal, double, Y axis

Ø 40	48-84946
Ø 1 1/2"	48-84947

Combination toolholder, both sides, double, Y axis

Ø 32	48-84948
Ø 1 1/4"	48-84949

© WTO GmbH * Subject to change without notice * www.wto.de

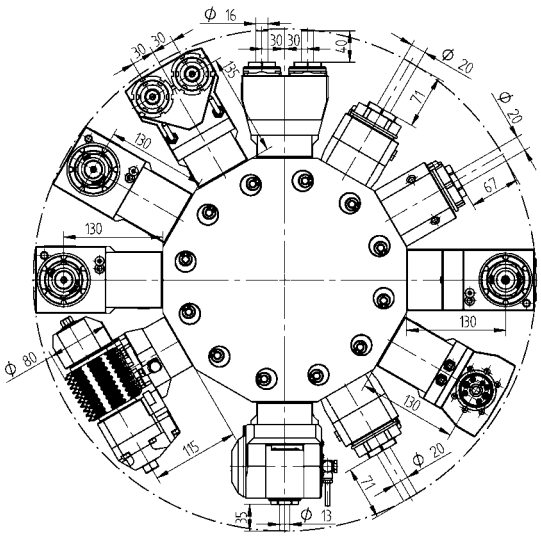

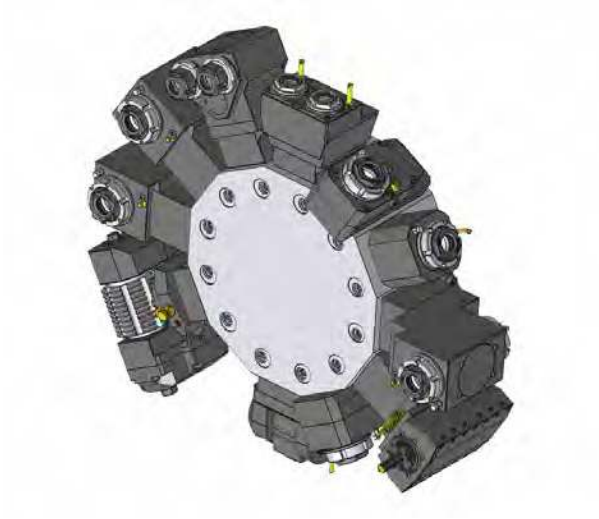

Driven Toolholders - QuickFlex®

Straight drill/milling unit

ER-32 QF	420132018-40	1:1	EC
	0067732000		
ER-32 QF	420132019-40	1:1	IC 80 bar
	0067732000		

Straight offset drill/milling unit

ER-32 QF	420132020-40	1:1	EC
	0067732000		
ER-32 QF	420132021-40	1:1	IC 80 bar
	0067732000		

Right angle drill/milling unit

ER-32 QF	420532049-40	1:1	EC
	0067732000		
ER-32 QF	420532050-40	1:1	IC 80 bar
	0067732000		

Right angle drill/milling unit, sub spindle

ER-32 QF	420532051-40	1:1	EC
	0067732000		
ER-32 QF	420532052-40	1:1	IC 80 bar
	0067732000		

Right angle drill/milling unit, both sides

ER-32 QF	420532053-40	1:1	EC
	0067732000		

Driven Toolholders - Enhanced Program

Straight offset drill/milling unit

ER-25 QF	420125018-40	1:2	EC
	0067725001		
ER-25 QF	420125019-40	1:2	IC 80 bar
	0067725001		
ER-32 QF	420132046-40	2:1	EC
	0067732000		
ER-32 QF	420132047-40	2:1	IC 80 bar
	0067732000		

Straight offset drill/milling unit, both sides

ER-32 QF	423002012-40	1:1	EC
	0067732000		
ER-32 QF	423002013-40	1:1	IC 80 bar
	0067732000		

Right angle drill/milling unit

ER-25 QF	420525028-40	1:2	EC
	0067725001		
ER-25 QF	420525029-40	1:2	IC 80 bar
	0067725001		
ER-32 QF	420532054-40	2:1	EC
	0067732000		
ER-32 QF	420532055-40	2:1	IC 80 bar
	0067732000		

Adjustable angle drill/milling unit

ER 20	411013012-40	1:1	EC
	00675000928		
ER 20	411013025-40	1:1	IC 80 bar
	00675000928		
ER 16	411010016-40	1:2	EC
	00675000936		
ER 16	411010017-40	1:2	IC 80 bar
	00675000936		

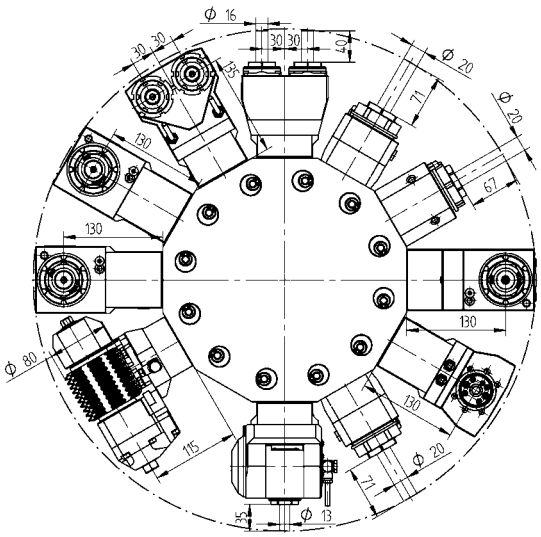

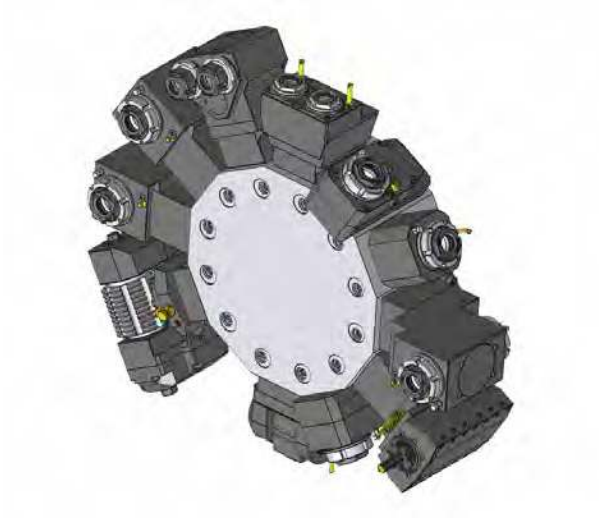

Driven Toolholders - Enhanced Program

Slitting saw unit

Type 14-2 410900010-40 2.62:1 EC
- 00675000460
- 160016142 Ø 16
- 160022142 Ø 22
- 160027142 Ø 27
- 160015142 Ø 5/8"
- 160019142 Ø 3/4"
- 160023142 Ø 7/8"
- 160025142 Ø 1"

Gear hobbing unit

Type 16-1 411500042-40 1:1 EC
- 96394
- 160022161 Ø 22
- 160016161 Ø 16
- 00675000926
- 160027161 Ø 27
- 160025161 Ø 1"
- 160019161 Ø 3/4"
- 160015161 Ø 5/8"

Type 16-1 411500032-40 2:1 EC
- 00675000926
- 160016161 Ø 16
- 160022161 Ø 22
- 160027161 Ø 27
- 160015161 Ø 5/8"
- 160019161 Ø 3/4"
- 160025161 Ø 1"
- 96394

Driven Toolholders - Enhanced Program

Straight drill/milling unit, double, Y axis

ER 25 413002024-40 1:1.5 EC
- 00675000930

ER 25 413002025-40 1:1.5 IC 80 bar
- 00675000930

2-spindle - Right angle drill/milling unit, Y axis

ER 25 413502014-40 1:1 EC
- 00675000915

ER 25 413502015-40 1:1 IC 80 bar
- 00675000915

2-spindle - Right angle drill/milling unit, both sides, Y axis

ER 25 413502019-40 1:1 EC
- 00675000915

Broaching unit for ID and OD

TN765050 414532008-40 1:1 EC

© WTO GmbH * Subject to change without notice * www.wto.de

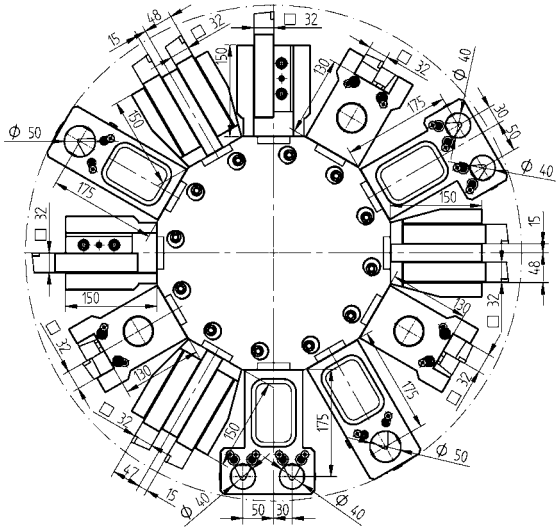

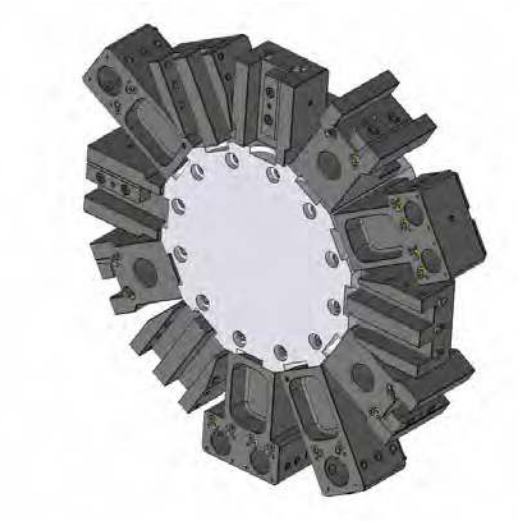

Static Toolholders - Standard Program

OD cutting holder

32	48-81921
1 1/4"	48-84560

OD cutting holder, HP-IC

25	48-109222-HP	IC 80 bar
1"	48-109223-HP	IC 80 bar

Face cutting holder

32	48-81923
1 1/4"	48-84559

Combination toolholder, universal

Ø 50	48-81924
Ø 2"	48-84530

Static Toolholders - Enhanced Program

OD cutting holder, double, Y axis

32 (1 1/4")	48-85286

OD cutting holder, double, Y axis, sub spindle

32 (1 1/4")	48-95077

Cut-off holder, adjustable

SH 32	48-100356

Cut-off holder, adjustable, long, HP-IC

SH 32	48-100318R 343-810100R30	IC 80 bar
SH 32	48-100318L 343-810100L30	IC 80 bar

Combination toolholder, universal, double, Y axis

Ø 40	48-85287
	241140020 ER32
	241140026 ER40
Ø 1 1/2"	48-85288
	2411150020 ER32

Boring bar holder, with slot

Ø 50	48-110846

Boring bar holder, blank

48-99905

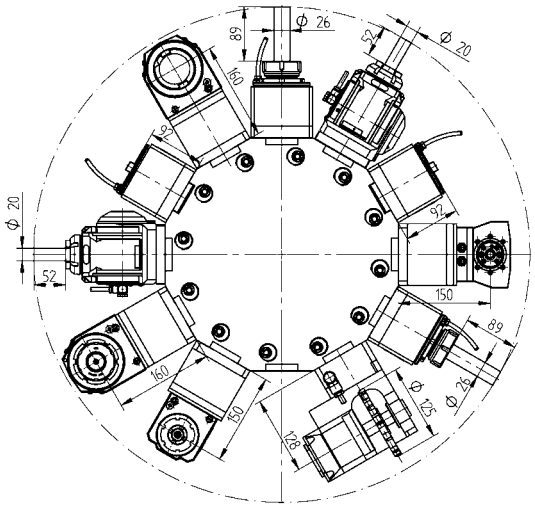

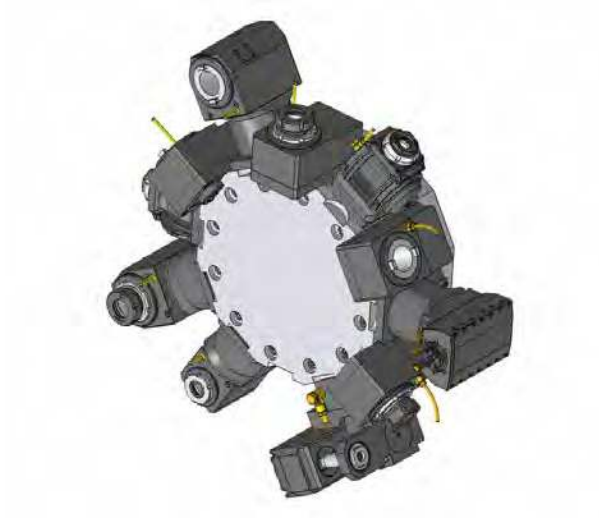

Driven Toolholders - Performance Series

Straight offset drill/milling unit

ER 40	410126070-50	1:1	EC
	00675000941		
ER 40	410126071-50	1:1	IC 80 bar
	00675000941		

Straight offset drill/milling unit taper ISO/BT/CAT 40

410140001-50 1:1 EC

Right angle drill/milling unit

ER 40	410526078-50	1:1	EC
	00675000744		
ER 40	410526063-50	1:1	IC 80 bar
	00675000744		

Right angle drill/milling unit taper ISO/BT/CAT 40

410540001-50 1:1 EC

Right angle drill/milling unit, sub spindle

ER 40	410526091-50	1:1	EC
	00675000744		
ER 40	410526092-50	1:1	IC 80 bar
	00675000744		

Driven Toolholders - Enhanced Program

Straight offset drill/milling unit

ER 25	410116038-50	1:2	EC
	00675000720		
ER 25	410116037-50	1:2	IC 80 bar
	00675000720		

Right angle drill/milling unit

ER 40	410526074-50	2:1	EC
	00675000744		
ER 40	410526082-50	2:1	IC 80 bar
	00675000744		

Adjustable angle drill/milling unit

ER-32 QF	421032010-50	1:1	EC
	00675000976		
ER-32 QF	421032011-50	1:1	IC 80 bar
	00675000976		

Adjustable angle drill/milling unit, long

ER-32 QF	421032012-50	1:1	EC
	00675000976		
ER-32 QF	421032013-50	1:1	IC 80 bar
	00675000976		

© WTO GmbH * Subject to change without notice * www.wto.de

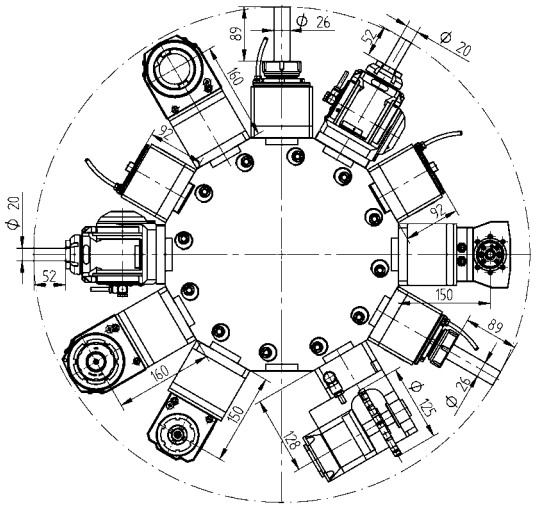

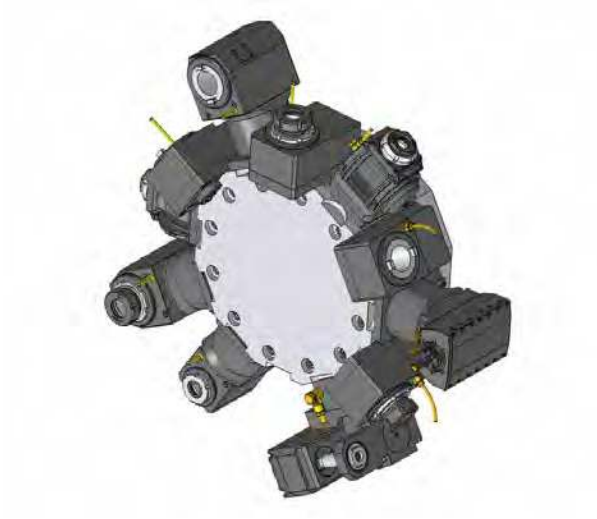

Driven Toolholders - Enhanced Program

Offset slitting saw unit

Type 19-2 411500012-50 3:1 EC

- 00675000259
- 160022192 Ø 22
- 160027192 Ø 27
- 160032192 Ø 32
- 160040192 Ø 40
- 160023192 Ø 7/8"
- 160025192 Ø 1"
- 160031192 Ø 1 1/4"
- 160038192 Ø 1 1/2"

Gear hobbing unit

Type 16-1 411500017-50 1:1 EC

- 00675000954
- 160016161 Ø 16
- 160022161 Ø 22
- 160027161 Ø 27
- 160015161 Ø 5/8"
- 160019161 Ø 3/4"
- 160025161 Ø 1"
- 96394

Broaching unit for ID and OD

TN765050 414532002-50 1:1 EC

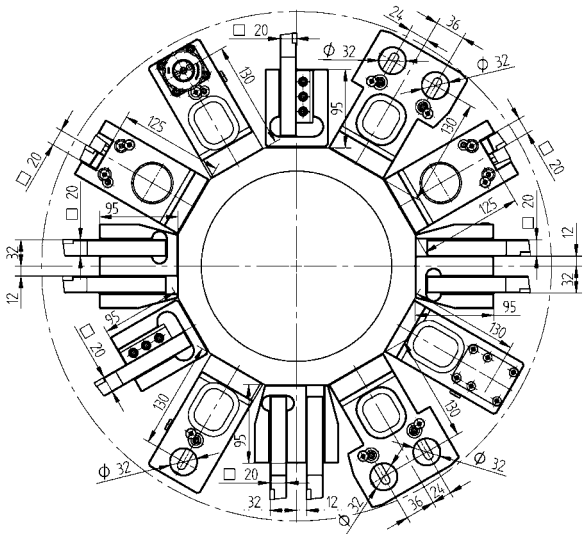

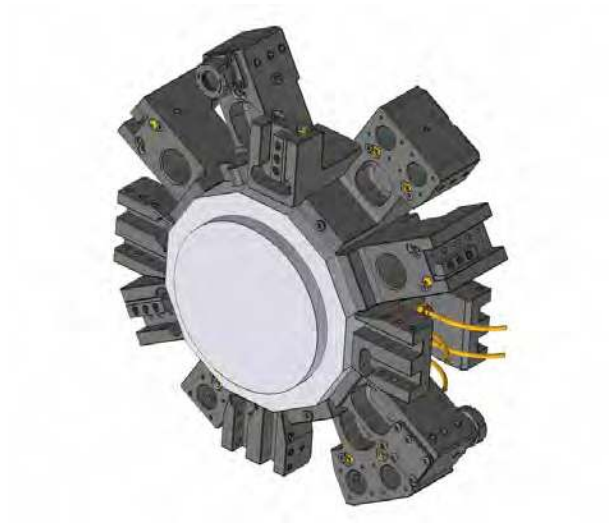

Static Toolholders - Standard Program

OD cutting holder, HP-IC

20	48-82534-HP	IC 80 bar
3/4"	48-82535-HP	IC 80 bar

OD cutting holder, sub spindle

3/4"	48-82538

OD cutting holder, sub spindle, HP-IC

20	48-82536-HP	IC 80 bar
3/4"	48-82538-HP	IC 80 bar

OD cutting holder, both sides

20	48-89297

OD cutting holder, both sides, HP-IC

20	48-89297-HP	IC 80 bar
3/4"	48-89298-HP	IC 80 bar

Face cutting holder

20	48-84005
3/4"	48-84158

Combination toolholder, universal

Ø 32	48-81929
	241132016 ER25
	241132020 ER32
Ø 40	48-111846
	241140020 ER32
	241140026 ER40
Ø 1 1/4"	48-82389
Ø 1 1/2"	48-111850

Static Toolholders - Standard Program

Combination toolholder, sub spindle

Ø 32	48-82787
	241132016 ER25
	241132020 ER32
Ø 1 1/4"	48-82788

Collet face drill holder

ER 32	48-83071
	107532000

Collet face drill holder, sub spindle

ER 32	48-83072
	107532000

© WTO GmbH * Subject to change without notice * www.wto.de

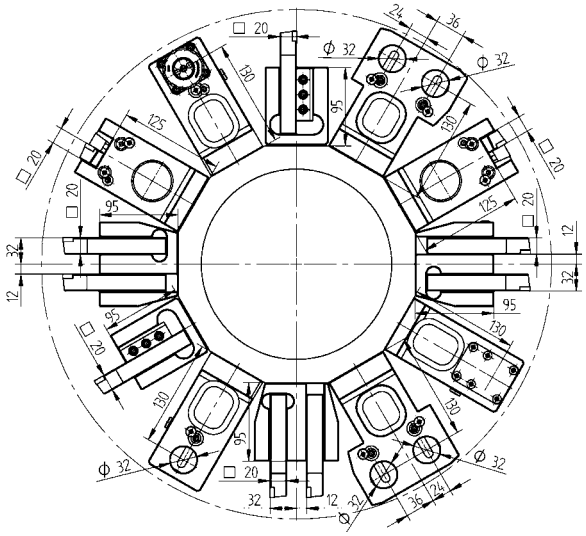

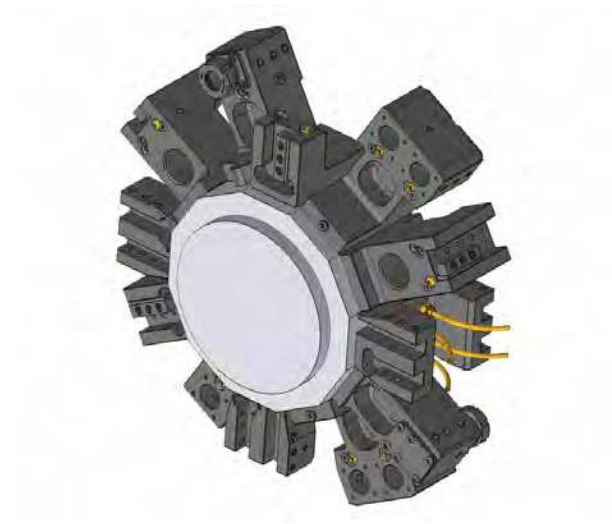

Static Toolholders - Enhanced Program

OD cutting holder, double, Y axis

20 (3/4") 48-88028

OD cutting holder, both sides, double, Y axis

20 (3/4") 48-87850

Cut-off holder, adjustable

SH 32 48-99061

Cut-off holder, adjustable, HP-IC

SH 32	48-99650R 343-810100R17	IC 80 bar
SH 32	48-99650L 343-810100L17	IC 80 bar

Combination toolholder, universal, double, Y axis

Ø 32 48-87853

241132016 ER25

241132020 ER32

Ø 1 1/4" 48-87907

2411125020 ER32

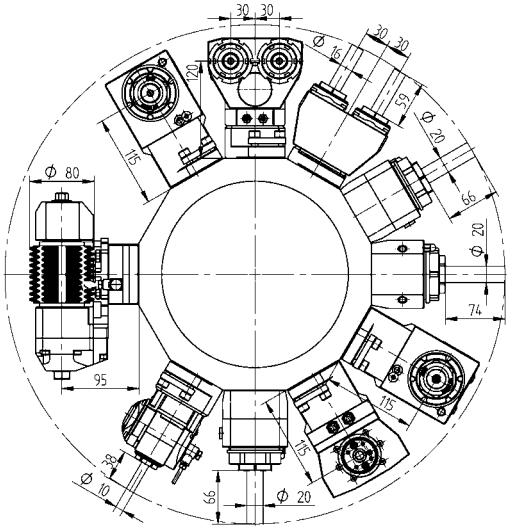

Driven Toolholders - QuickFlex®

Straight offset drill/milling unit

ER-32 QF	420132030-40	1:1	EC
	0067732000		
ER-32 QF	420132031-40	1:1	IC 80 bar
	0067732000		

Straight offset drill/milling unit, sub spindle

ER-32 QF	420132034-40	1:1	EC
	0067732000		
ER-32 QF	420132035-40	1:1	IC 80 bar
	0067732000		

Right angle drill/milling unit

ER-32 QF	420532071-40	1:1	EC
	0067732000		
ER-32 QF	420532072-40	1:1	IC 80 bar
	0067732000		

Right angle drill/milling unit, sub spindle

ER-32 QF	420532073-40	1:1	EC
	0067732000		
ER-32 QF	420532074-40	1:1	IC 80 bar
	0067732000		

Right angle drill/milling unit, both sides

ER-32 QF	420532075-40	1:1	EC
	0067732000		

Driven Toolholders - Enhanced Program

Straight drill/milling unit

ER-32 QF	420132038-40	1:1	EC
	0067732000		
ER-32 QF	420132039-40	1:1	IC 80 bar
	0067732000		

Straight offset drill/milling unit

ER-25 QF	420125016-40	1:2	EC
	0067725001		
ER-25 QF	420125017-40	1:2	IC 80 bar
	0067725001		
ER-32 QF	420132052-40	2:1	EC
	0067732000		
ER-32 QF	420132053-40	2:1	IC 80 bar
	0067732000		

Straight offset drill/milling unit, sub spindle

ER-25 QF	420125040-40	1:2	EC
	0067725001		
ER-25 QF	420125041-40	1:2	IC 80 bar
	0067725001		

Straight offset drill/milling unit, both sides

ER-32 QF	423002010-40	1:1	EC
	0067732000		
ER-32 QF	423002011-40	1:1	IC 80 bar
	0067732000		

© WTO GmbH * Subject to change without notice * www.wto.de

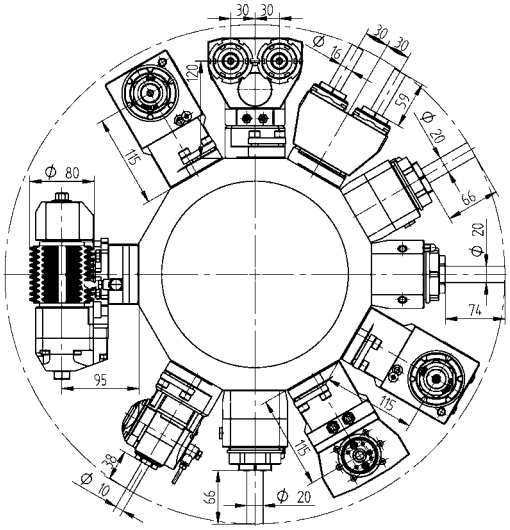

Driven Toolholders - Enhanced Program

Right angle drill/milling unit

ER-25 QF	420525034-40	1:2	EC
	0067725001		
ER-25 QF	420525035-40	1:2	IC 80 bar
	0067725001		
ER-32 QF	420532089-40	2:1	EC
	0067732000		
ER-32 QF	420532090-40	2:1	IC 80 bar
	0067732000		

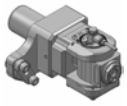

Adjustable angle drill/milling unit

ER 16	411010010-40	1:1	EC
	00675000902		
ER 16	411010011-40	1:1	IC 80 bar
	00675000902		
ER 11	411007003-40	1:2	EC
	00675000914		
ER 11	411007004-40	1:2	IC 80 bar
	00675000914		

Offset slitting saw unit

Type 14-2	411500004-40	2.73:1	EC
	00675000460		
	160016142 Ø 16		
	160022142 Ø 22		
	160027142 Ø 27		
	160015142 Ø 5/8"		
	160019142 Ø 3/4"		
	160023142 Ø 7/8"		
	160025142 Ø 1"		

Driven Toolholders - Enhanced Program

Gear hobbing unit

Type 16-1	411500028-40	2:1	EC
	00675000926		
	160016161 Ø 16		
	160022161 Ø 22		
	160027161 Ø 27		
	160015161 Ø 5/8"		
	160019161 Ø 3/4"		
	160025161 Ø 1"		
	96394		

Straight drill/milling unit, double, Y axis

ER 25	413002022-40	1:1.5	EC
	00675000930		
ER 25	413002023-40	1:1.5	IC 80 bar
	00675000930		

2-spindle - Right angle drill/milling unit, Y axis

ER 25	413502012-40	1:1	EC
	00675000915		
ER 25	413502013-40	1:1	IC 80 bar
	00675000915		

Broaching unit for ID and OD

TN765050	414532010-40	1:1	EC

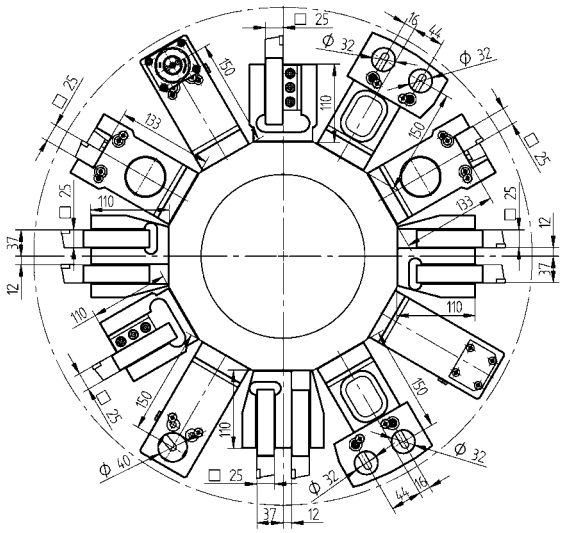

Static Toolholders - Standard Program

OD cutting holder

1"	48-82544	

OD cutting holder, HP-IC

25	48-81926-HP	IC 80 bar
1"	48-82544-HP	IC 80 bar

OD cutting holder, sub spindle

1"	48-82546	

OD cutting holder, sub spindle, HP-IC

25	48-82545-HP	IC 80 bar
1"	48-82546-HP	IC 80 bar

OD cutting holder, both sides, HP-IC

25	48-89299-HP	IC 80 bar
1"	48-89300-HP	IC 80 bar

Face cutting holder

25	48-84006
1"	48-84226

Combination toolholder

Ø 40	48-81930
	241140020 ER32
Ø 1 1/2"	48-82481

Combination toolholder, sub spindle

Ø 40	48-82783
	241140020 ER32
Ø 1 1/2"	48-82784

Static Toolholders - Standard Program

Combination toolholder, both sides

Ø 40	48-106919

Collet face drill holder

ER 32	48-82986
	107532000

Collet face drill holder, sub spindle

ER 32	48-82988
	107532000

© WTO GmbH * Subject to change without notice * www.wto.de

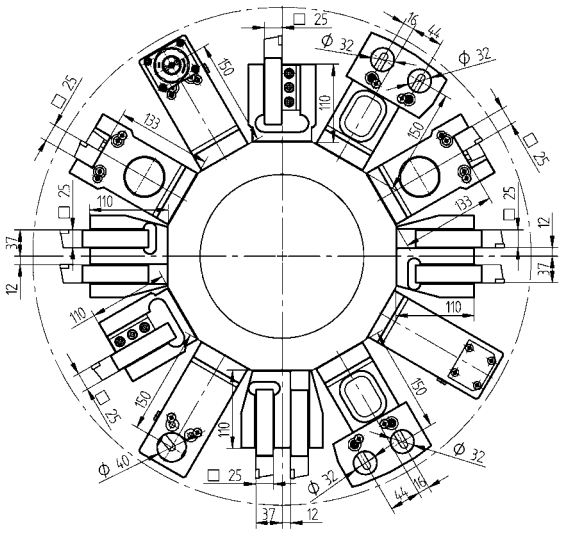

Static Toolholders - Enhanced Program

OD cutting holder, double, Y axis

25(1") 48-88032

OD cutting holder, both sides, double, Y axis

25(1") 48-87706

Cut-off holder, adjustable

SH 32 48-99062

Cut-off holder, adjustable, HP-IC

SH 32	48-102266R	IC 80 bar
SH 32	48-102266L	IC 80 bar

Combination toolholder, both sides, double, Y axis

Ø 32 48-87698

241132020 ER32

Ø 1 1/4" 48-87741

2411125020 ER32

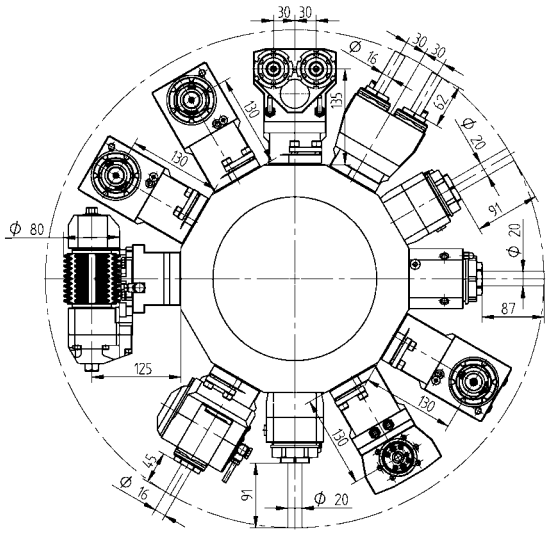

Driven Toolholders - QuickFlex®

Straight offset drill/milling unit

ER-32 QF	420132032-40	1:1	EC
	0067732000		
ER-32 QF	420132033-40	1:1	IC 80 bar
	0067732000		

Straight offset drill/milling unit, sub spindle

ER-32 QF	420132036-40	1:1	EC
	0067732000		
ER-32 QF	420132037-40	1:1	IC 80 bar
	0067732000		

Right angle drill/milling unit

ER-32 QF	420532076-40	1:1	EC
	0067732000		
ER-32 QF	420532077-40	1:1	IC 80 bar
	0067732000		

Right angle drill/milling unit, sub spindle

ER-32 QF	420532078-40	1:1	EC
	0067732000		
ER-32 QF	420532079-40	1:1	IC 80 bar
	0067732000		

Right angle drill/milling unit, both sides

ER-32 QF	420532080-40	1:1	EC
	0067732000		

Driven Toolholders - Enhanced Program

Straight drill/milling unit

ER-32 QF	420132042-40	1:1	EC
	0067732000		
ER-32 QF	420132043-40	1:1	IC 80 bar
	0067732000		

Straight offset drill/milling unit

ER-25 QF	420125022-40	1:2	EC
	0067725001		
ER-25 QF	420125023-40	1:2	IC 80 bar
	0067725001		
ER-32 QF	420132050-40	2:1	EC
	0067732000		
ER-32 QF	420132051-40	2:1	IC 80 bar
	0067732000		

Straight offset drill/milling unit, both sides

ER-32 QF	423002016-40	1:1	EC
	0067732000		
ER-32 QF	423002017-40	1:1	IC 80 bar
	0067732000		

Right angle drill/milling unit

ER-25 QF	420525032-40	1:2	EC
	0067725001		
ER-25 QF	420525033-40	1:2	IC 80 bar
	0067725001		
ER-32 QF	420532087-40	2:1	EC
	0067732000		
ER-32 QF	420532088-40	2:1	IC 80 bar
	0067732000		

© WTO GmbH * Subject to change without notice * www.wto.de

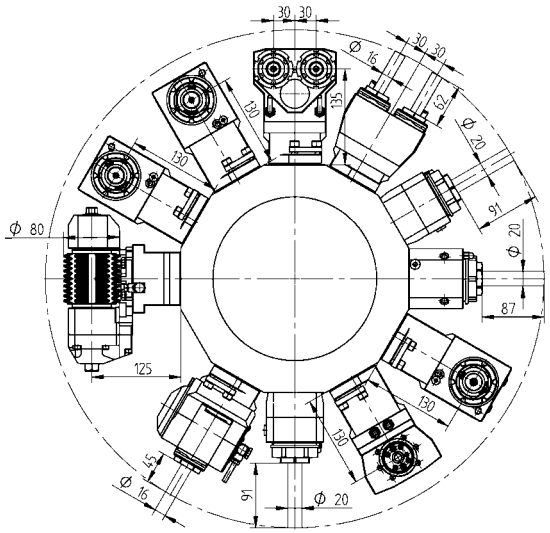

Driven Toolholders - Enhanced Program

Adjustable angle drill/milling unit

ER 25	411016005-40	1:1	EC
	00675000934		
ER 25	411016023-40	1:1	IC 80 bar
	00675000934		
ER 16	411010014-40	1:2	EC
	00675000936		
ER 16	411010015-40	1:2	IC 80 bar
	00675000936		

Offset slitting saw unit

Type 14-2	411500001-40	2.73:1	EC
	00675000460		
	160016142 Ø 16		
	160022142 Ø 22		
	160027142 Ø 27		
	160015142 Ø 5/8"		
	160019142 Ø 3/4"		
	160023142 Ø 7/8"		
	160025142 Ø 1"		

Gear hobbing unit

Type 16-1	411500030-40	2:1	EC
	00675000954		
	160016161 Ø 16		
	160022161 Ø 22		
	160027161 Ø 27		
	160015161 Ø 5/8"		
	160019161 Ø 3/4"		
	160025161 Ø 1"		
	96394		

Driven Toolholders - Enhanced Program

Straight drill/milling unit, double, Y axis

ER 25	413002026-40	1:1.5	EC
	00675000930		
ER 25	413002027-40	1:1.5	IC 80 bar
	00675000930		

2-spindle - Right angle drill/milling unit, Y axis

ER 25	413502016-40	1:1	EC
	00675000915		
ER 25	413502017-40	1:1	IC 80 bar
	00675000915		

2-spindle - Right angle drill/milling unit, both sides, Y axis

ER 25	413502023-40	1:1	EC
	00675000915		

Broaching unit for ID and OD

TN765050	414532011-40	1:1	EC

Standard reduction sleeves - cylindrical

Reduction sleeve Ø 20

240020006	ø 6
240020008	ø 8
240020010	ø 10
240020012	ø 12
240020014	ø 14
240020016	ø 16

Reduction sleeve Ø 32

240032006	ø 6
240032008	ø 8
240032010	ø 10
240032012	ø 12
240032016	ø 16
240032020	ø 20
240032025	ø 25

Reduction sleeve Ø 40

240040006	ø 6
240040008	ø 8
240040010	ø 10
240040012	ø 12
240040014	ø 14
240040016	ø 16
240040020	ø 20
240040025	ø 25
240040032	ø 32

Reduction sleeve Ø 50

240050010	ø 10
240050012	ø 12
240050016	ø 16
240050020	ø 20
240050025	ø 25
240050032	ø 32
240050040	ø 40

Reduction sleeve Ø 3/4"

2400075025	ø 1/4"
2400075032	ø 5/16"
2400075038	ø 3/8"
2400075050	ø 1/2"
2400075063	ø 5/8"

Reduction sleeve Ø 1 1/4"

2400125038	ø 3/8"
2400125050	ø 1/2"
2400125063	ø 5/8"
2400125075	ø 3/4"
2400125088	ø 7/8"
2400125100	ø 1"

Standard reduction sleeves - cylindrical

Reduction sleeve Ø 1 1/2"

2400150038	ø 3/8"
2400150050	ø 1/2"
2400150063	ø 5/8"
2400150075	ø 3/4"
2400150088	ø 7/8"
2400150100	ø 1"
2400150125	ø 1 1/4"

Reduction sleeve Ø 2"

2400200050	ø 1/2"
2400200063	ø 5/8"
2400200088	ø 7/8"
2400200100	ø 1"
2400200125	ø 1 1/4"
2400200150	ø 1 1/2"
2400200175	ø 1 3/4"

© WTO GmbH * Subject to change without notice * www.wto.de

Standard reduction sleeves - morse taper

Reduction sleeve Ø 32

240532001	MT 1
240532002	MT 2
240532003	MT 3

Reduction sleeve Ø 40

240540001	MT 1
240540002	MT 2
240540003	MT 3
240540004	MT 4

Reduction sleeve Ø 50

240550002	MT 2
240550003	MT 3
240550004	MT 4

Collets DIN 6499B (ER/ESX)

ER 11	mm	inch
190011000	ø 7-0.5	ø 0.276-0.020
190011010	ø 1-0.5	ø 0.039-0.020
190011015	ø 1.5-1	ø 0.059-0.039
190011020	ø 2-1.5	ø 0.079-0.059
190011025	ø 2.5-2	ø 0.098-0.079
190011030	ø 3-2.5	ø 0.118-0.098
190011035	ø 3.5-3	ø 0.138-0.118
190011040	ø 4-3.5	ø 0.158-0.138
190011045	ø 4.5-4	ø 0.177-0.158
190011050	ø 5-4.5	ø 0.197-0.177
190011055	ø 5.5-5	ø 0.217-0.197
190011060	ø 6-5.5	ø 0.236-0.217
190011065	ø 6.5-6	ø 0.256-0.236
190011070	ø 7-6.5	ø 0.276-0.256

ER 16	mm	inch
190016000	ø 10-0.5	ø 0.394-0.020
190016010	ø 1-0.5	ø 0.039-0.020
190016020	ø 2-1	ø 0.079-0.039
190016030	ø 3-2	ø 0.118-0.079
190016040	ø 4-3	ø 0.158-0.118
190016050	ø 5-4	ø 0.197-0.158
190016060	ø 6-5	ø 0.236-0.197
190016070	ø 7-6	ø 0.276-0.236
190016080	ø 8-7	ø 0.315-0.276
190016090	ø 9-8	ø 0.354-0.315
190016100	ø 10-9	ø 0.394-0.354

ER 20	mm	inch
190020000	ø 13-1	ø 0.512-0.039
190020010	ø 1-0.5	ø 0.039-0.020
190020020	ø 2-1	ø 0.079-0.039
190020030	ø 3-2	ø 0.118-0.079
190020040	ø 4-3	ø 0.157-0.118
190020050	ø 5-4	ø 0.197-0.157
190020060	ø 6-5	ø 0.236-0.197
190020070	ø 7-6	ø 0.276-0.236
190020080	ø 8-7	ø 0.315-0.276
190020090	ø 9-8	ø 0.354-0.315
190020100	ø 10-9	ø 0.394-0.354
190020110	ø 11-10	ø 0.433-0.394
190020120	ø 12-11	ø 0.472-0.433
190020130	ø 13-12	ø 0.512-0.472

Collets DIN 6499B (ER/ESX)

ER 25	mm	inch
190025000	ø 16-1	ø 0.630-0.039
190025020	ø 2-1	ø 0.079-0.039
190025030	ø 3-2	ø 0.118-0.079
190025040	ø 4-3	ø 0.157-0.118
190025050	ø 5-4	ø 0.197-0.157
190025060	ø 6-5	ø 0.236-0.197
190025070	ø 7-6	ø 0.276-0.236
190025080	ø 8-7	ø 0.315-0.276
190025090	ø 9-8	ø 0.354-0.315
190025100	ø 10-9	ø 0.394-0.354
190025110	ø 11-10	ø 0.433-0.394
190025120	ø 12-11	ø 0.472-0.433
190025130	ø 13-12	ø 0.512-0.472
190025140	ø 14-13	ø 0.551-0.512
190025150	ø 15-14	ø 0.591-0.551
190025160	ø 16-15	ø 0.630-0.591

ER 32	mm	inch
190032000	ø 20-2	ø 0.787-0.079
190032030	ø 3-2	ø 0.118-0.079
190032040	ø 4-3	ø 0.157-0.118
190032050	ø 5-4	ø 0.197-0.157
190032060	ø 6-5	ø 0.236-0.197
190032070	ø 7-6	ø 0.276-0.236
190032080	ø 8-7	ø 0.315-0.276
190032090	ø 9-8	ø 0.354-0.315
190032100	ø 10-9	ø 0.394-0.354
190032110	ø 11-10	ø 0.433-0.394
190032120	ø 12-11	ø 0.472-0.433
190032130	ø 13-12	ø 0.512-0.472
190032140	ø 14-13	ø 0.551-0.512
190032150	ø 15-14	ø 0.591-0.551
190032160	ø 16-15	ø 0.630-0.591
190032170	ø 17-16	ø 0.669-0.630
190032180	ø 18-17	ø 0.709-0.669
190032190	ø 19-18	ø 0.748-0.709
190032200	ø 20-19	ø 0.787-0.748

© WTO GmbH * Subject to change without notice * www.wto.de

Collets DIN 6499B (ER/ESX)

ER 40	mm	inch
190040000	ø 26-3	ø 1.024-0.118
190040040	ø 4-3	ø 0.157-0.118
190040050	ø 5-4	ø 0.197-0.157
190040060	ø 6-5	ø 0.236-0.197
190040070	ø 7-6	ø 0.276-0.236
190040080	ø 8-7	ø 0.315-0.276
190040090	ø 9-8	ø 0.354-0.315
190040100	ø 10-9	ø 0.394-0.354
190040110	ø 11-10	ø 0.433-0.394
190040120	ø 12-11	ø 0.472-0.433
190040130	ø 13-12	ø 0.512-0.472
190040140	ø 14-13	ø 0.551-0.512
190040150	ø 15-14	ø 0.591-0.551
190040160	ø 16-15	ø 0.630-0.591
190040170	ø 17-16	ø 0.669-0.630
190040180	ø 18-17	ø 0.709-0.669
190040190	ø 19-18	ø 0.748-0.709
190040200	ø 20-19	ø 0.787-0.748
190040210	ø 21-20	ø 0.827-0.787
190040220	ø 22-21	ø 0.866-0.827
190040230	ø 23-22	ø 0.906-0.866
190040240	ø 24-23	ø 0.945-0.906
190040250	ø 25-24	ø 0.984-0.945
190040260	ø 26-25	ø 1.024-0.984

Collets DIN 6499D (ER/ESX) - sealed, for IC

ER 11	mm	inch
191011030	ø 3	
191011040	ø 4	
191011050	ø 5	
191011060	ø 6	
191111013-in		ø 0.125
191111019-in		ø 0.188
191111025-in		ø 0.25

ER 16	mm	inch
191016000	ø 3-10	
191016030	ø 3	
191016040	ø 4	
191016050	ø 5	
191016060	ø 6	
191016070	ø 7	
191016080	ø 8	
191016090	ø 9	
191016100	ø 10	
191116001		ø 0.125-0.375
191116013-in		ø 0.125
191116019-in		ø 0.188
191116025-in		ø 0.25
191116031-in		ø 0.313
191116038-in		ø 0.375

ER 20	mm	inch
191020000	ø 3-12	
191020030	ø 3	
191020040	ø 4	
191020050	ø 5	
191020060	ø 6	
191020070	ø 7	
191020080	ø 8	
191020090	ø 9	
191020100	ø 10	
191020110	ø 11	
191020120	ø 12	
191120001		ø 0.125-0.5
191120013-in		ø 0.125
191120019-in		ø 0.188
191120025-in		ø 0.25
191120031-in		ø 0.313
191120038-in		ø 0.375
191120044-in		ø 0.438
191120050-in		ø 0.5

Collets DIN 6499D (ER/ESX) - sealed, for IC

ER 25	mm	inch
191025000	ø 4-16	
191025030	ø 3	
191025040	ø 4	
191025050	ø 5	
191025060	ø 6	
191025070	ø 7	
191025080	ø 8	
191025090	ø 9	
191025100	ø 10	
191025110	ø 11	
191025120	ø 12	
191025130	ø 13	
191025140	ø 14	
191025150	ø 15	
191025160	ø 16	
191125001		ø 0.25-0.625
191125025-in		ø 0.25
191125031-in		ø 0.313
191125038-in		ø 0.375
191125044-in		ø 0.438
191125050-in		ø 0.5
191125056-in		ø 0.563
191125063-in		ø 0.625

ER 32	mm	inch
191032000	ø 4-20	
191032030	ø 3	
191032040	ø 4	
191032050	ø 5	
191032060	ø 6	
191032070	ø 7	
191032080	ø 8	
191032090	ø 9	
191032100	ø 10	
191032110	ø 11	
191032120	ø 12	
191032130	ø 13	
191032140	ø 14	
191032150	ø 15	
191032160	ø 16	
191032170	ø 17	
191032180	ø 18	
191032190	ø 19	
191032200	ø 20	
191132001		ø 0.25-0.75
191132025-in		ø 0.25
191132031-in		ø 0.313
191132038-in		ø 0.375
191132044-in		ø 0.438
191132050-in		ø 0.5
191132056-in		ø 0.563
191132063-in		ø 0.625
191132069-in		ø 0.688
191132075-in		ø 0.75

Collets DIN 6499D (ER/ESX) - sealed, for IC

ER 40	mm	inch
191040060	ø 6	
191040080	ø 8	
191040100	ø 10	
191040120	ø 12	
191040140	ø 14	
191040160	ø 16	
191040180	ø 18	
191040200	ø 20	
191040220	ø 22	
191040250	ø 25	
191140025-in		ø 0.25
191140031-in		ø 0.313
191140038-in		ø 0.375
191140044-in		ø 0.438
191140050-in		ø 0.5
191140056-in		ø 0.563
191140063-in		ø 0.625
191140069-in		ø 0.688
191140075-in		ø 0.75
191140088-in		ø 0.875
191140100-in		ø 1

© WTO GmbH * Subject to change without notice * www.wto.de

Quality without compromise.

All manufacturing steps are based on highest precision.

According to our own device that for the manufacture of high precision tooling systems high precision machine tools are essential we only use the latest machine tool technology to manufacture our parts.

At WTO not only the final products but also all manufacturing steps are checked and documented.
All our products are measured on high precision 3D-coordinate-measuring machines.

WTO worldwide

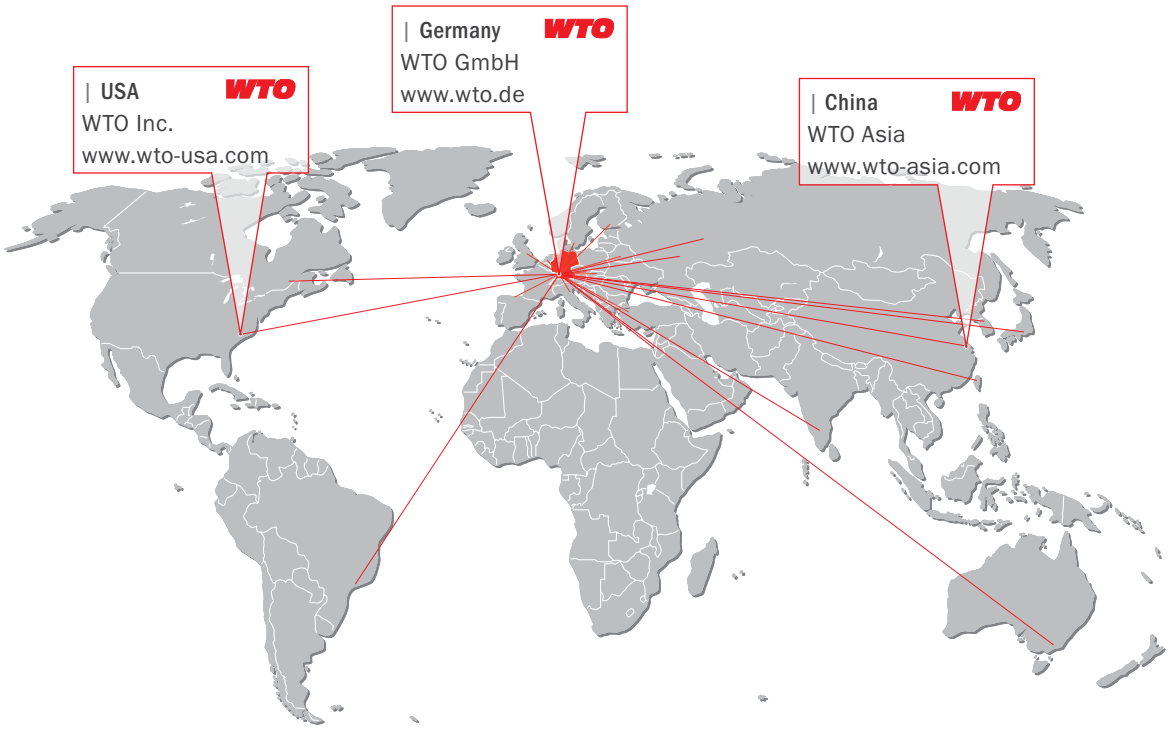

WTO GmbH
Auf der oberen Au 45
77797 Ohlsbach
Germany

WTO USA
13900 S Lakes Dr Ste F
Charlotte NC 28273-7119
USA

WTO Asia
Room 109-110, Building 2
No. 228 Banting Road
Jiuting Town,
Songjiang District
201615 Shanghai
China

Our distribution partners. Competence right there.

| Australia
Dimac Tooling Ltd.
sales@dimac.com.au

| Belarus
LLC "PMI Engineering"
tool@pmi.by

| Brazil
TF2
tfdois@tfdois.com.br

| Canada
Mittmann Industrial Inc.
info@mittmann.com

| China
Shanghai Gangde
wtocando@yahoo.com

| Czech Republic
ALBA precision, spol. s.r.o.
info@albaprecision.cz

| Denmark
Tool-part
cj@tool-part.dk

| Finland
Suomen Terätuonti Oy
myynti@stt.as

| France
Philippe Tagliafero
pta@wto.de

| Great Britain
Cutwel Ltd.
sales@cutwel.net

| India
Ulhas Patil
u.patil@wto-asia.com

| Israel
E.Y.A.R. Ltd.
boris@eyar.co.il

| Italy
Prymark srl
commerciale@prymark.it

| Japan
NK Works Co. Ltd.
k_samba@nk-works.co.jp

| Korea
WTO Office Korea
is.chon@wto-korea.com

| Mexico
Workholding Engineering De México
info@wem.com.mx

| Netherlands
Toologic BeNeLux B.V.
info@toologic-benelux.nl

| Norway
Helge Karlsen Verktøy og Maskin AS
hkvm@hkvm.no

| Poland
ARCO Andrzej Rudenko
info@arcotools.pl

| Romania
SC Elif Trading SRL
bulent.ozkan@eliftrading.com

| Russia
WTO Office Russia
office@wto-russia.com

| Slowakia
ALBA precision s.r.o.
albaprecision@albaprecision.sk

| Spain
ITALMATIC, S.A.
italmatic@italmatic.es

| Sweden
Komet Scandinavia AB
scandinavia@kometgroup.com

| Switzerland
Utilis AG
info@utilis.com

| Taiwan
Kaiko Co., Ltd.
info@kaiko.com.tw

| Turkey
MYK CNC MAKINA SAN. VE
huseyin.tatlidil@mykcnc.com.tr

| Ukraine
„LLC" SPA Stankopromimport
info@phoenix-ua.com

08 I 2019 en